Ultracapacitor Energy Management and Controller Development for a Series-Parallel 2x2 Hybrid Electric Vehicle

Jared Hicks, Robert Gruich, Alex Oldja, Dustin Myers, Tom Hartley,

Robert Veillette, Iqbal Husain

Department of Electrical and Computer Engineering

The University of Akron

Akron, OH, USA

The University of Akron

Ultracapacitor Management Team

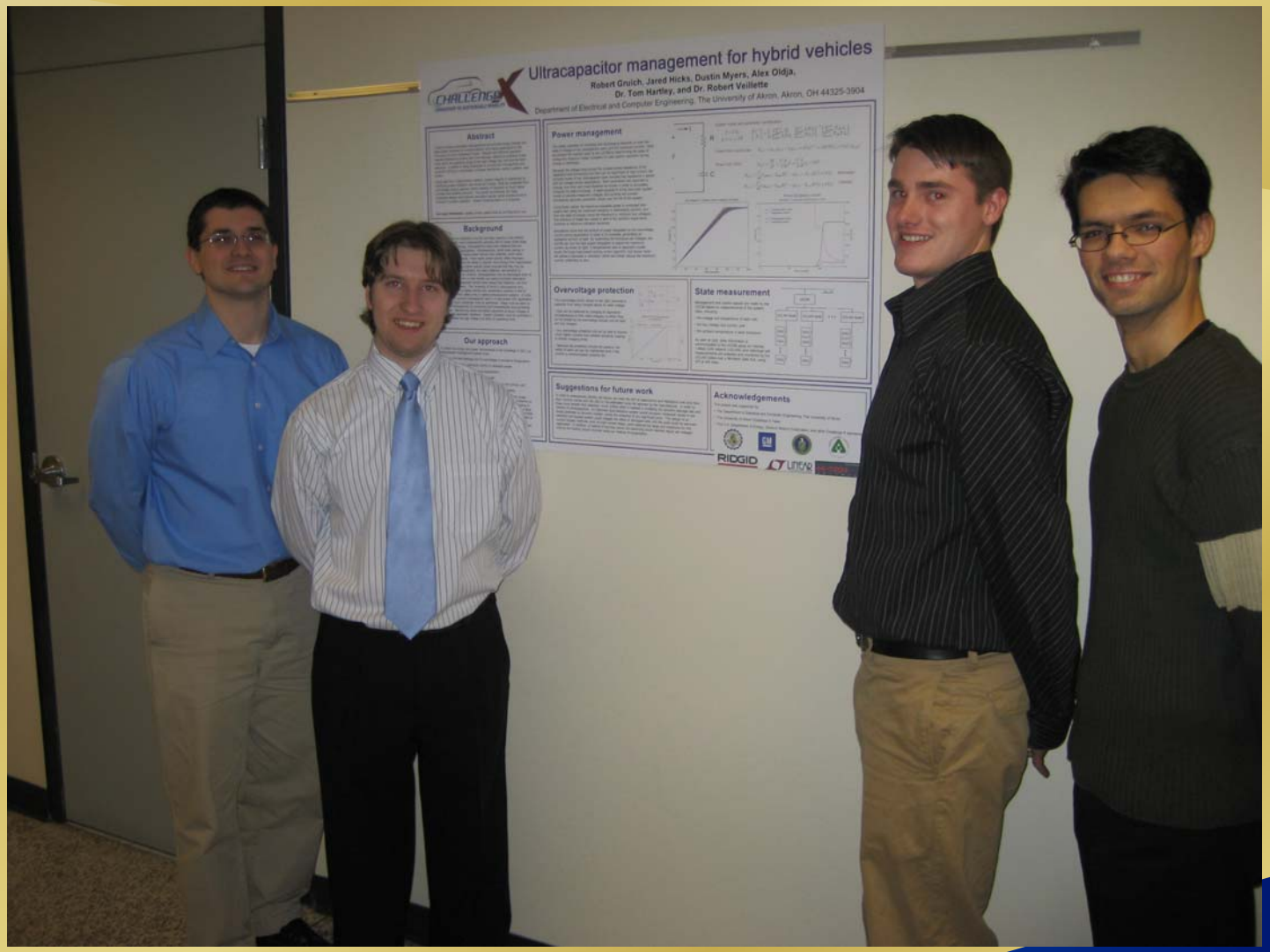

The University of Akron

Competition Overview

- Government – Industry – University Partnership
- Four-year student design competition
  - 17 Major Universities

Year 1: Design
Year 2: Build
Year 3: Refine
Year 4: Polish

- Redesign the Powertrain of a 2005 Chevrolet Equinox In Order To:
  - Reduce Well to Wheel Energy Use
  - Reduce Petroleum Usage
  - Increase Fuel Economy
  - Reduce Green-House Emissions
  - Maintain Consumer Acceptability

Challenge X Official Sponsors

- Headline Sponsors
  - U.S. Department of Energy
  - General Motors Corporation
- Platinum Sponsors
  - Natural Resources Canada
  - The MathWorks
  - National Instruments
  - U.S. Environmental Protection Agency
  - U.S. Department of Transportation
- Gold Sponsors
  - National Science Foundation
  - Visteon
  - Dana Corporation
  - BP
  - Delphi Corporation
  - Freescale Semiconductor
- Silver Sponsors
  - Johnson Controls
  - Cobasys
  - ChevronTexaco
  - Ballard Power Systems
  - Michelin
  - Freescale Semiconductor
  - IAV Engineering
  - dSPACE, Inc.
  - Opal-RT Technologies
  - AVL
  - Governors' Ethanol Coalition
  - Renewable Fuels Association
- Bronze Sponsors
  - Ricardo
  - Gamma Technologies
- Fuel Cell Sponsor
  - Hydrogenics Corporation

- University Teams:
  - Michigan Tech. Univ.
  - Mississippi St. Univ.
  - Ohio State University
  - Penn State
  - Rose-Hulman Inst. of Tech.
  - San Diego St. Univ.
  - Texas Tech. Univ.
  - Univ. of Akron
  - Univ. of Calif., Davis
  - Univ. of Michigan

  - Univ. of Tulsa
  - Univ. of Waterloo
  - Univ. of Wisconsin, Madison
  - Virginia Tech
  - West Virginia Univ.
  - Univ. of Tennessee
  - Univ. of Texas, Austin

The University of Akron
GM
CHALLENGE X
Zippy
Joey

Joey's Architecture

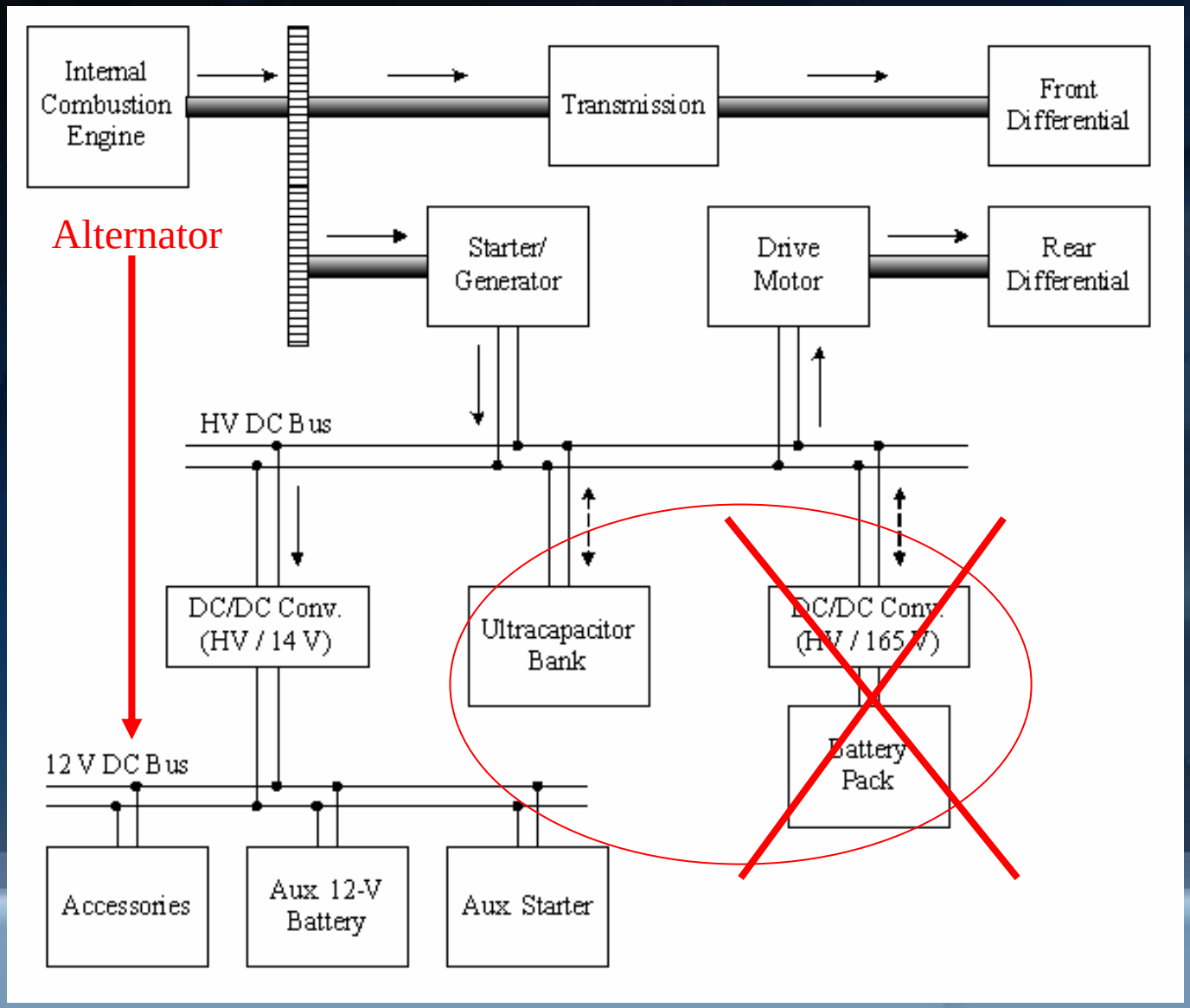

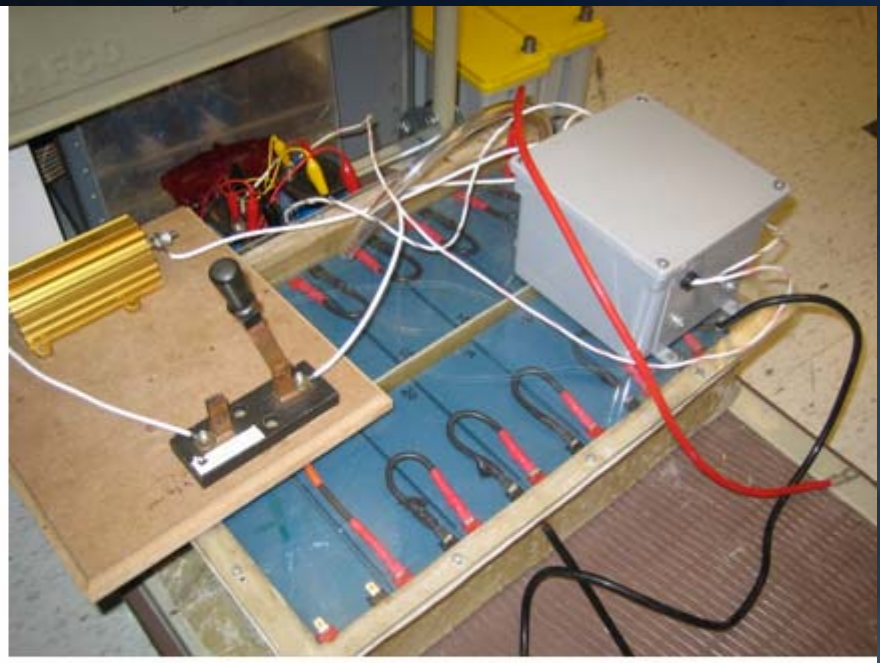

BattLab Lead-Acid Packs

Johnson Controls Pack

Panasonic Pack

Cobasys Pack

Maxwell Ultracapacitors

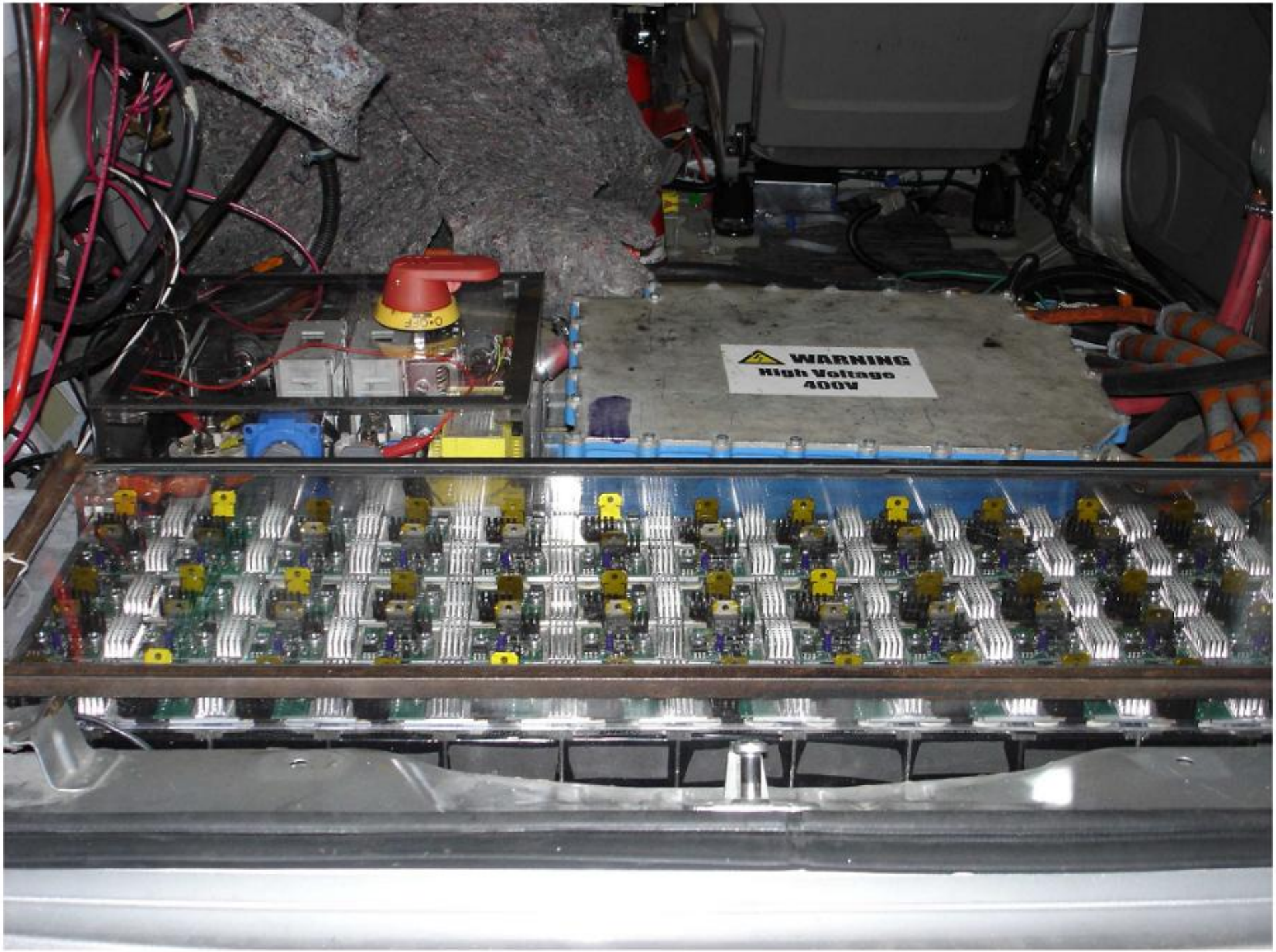
WARNING
High Voltage
400V

Major requirements

- **Protect cells from damage due to overvoltage or excessive temperature**
- **Advise SCM on available power**
- **Reduce cell voltage imbalances via equalization**
- **Respond to system faults and communicate status to vehicle**
- **Avoid high ambient temperatures (which reduce cell lifetime)**
- **Provide accurate state measurement (voltage and temperature)**

Control architecture

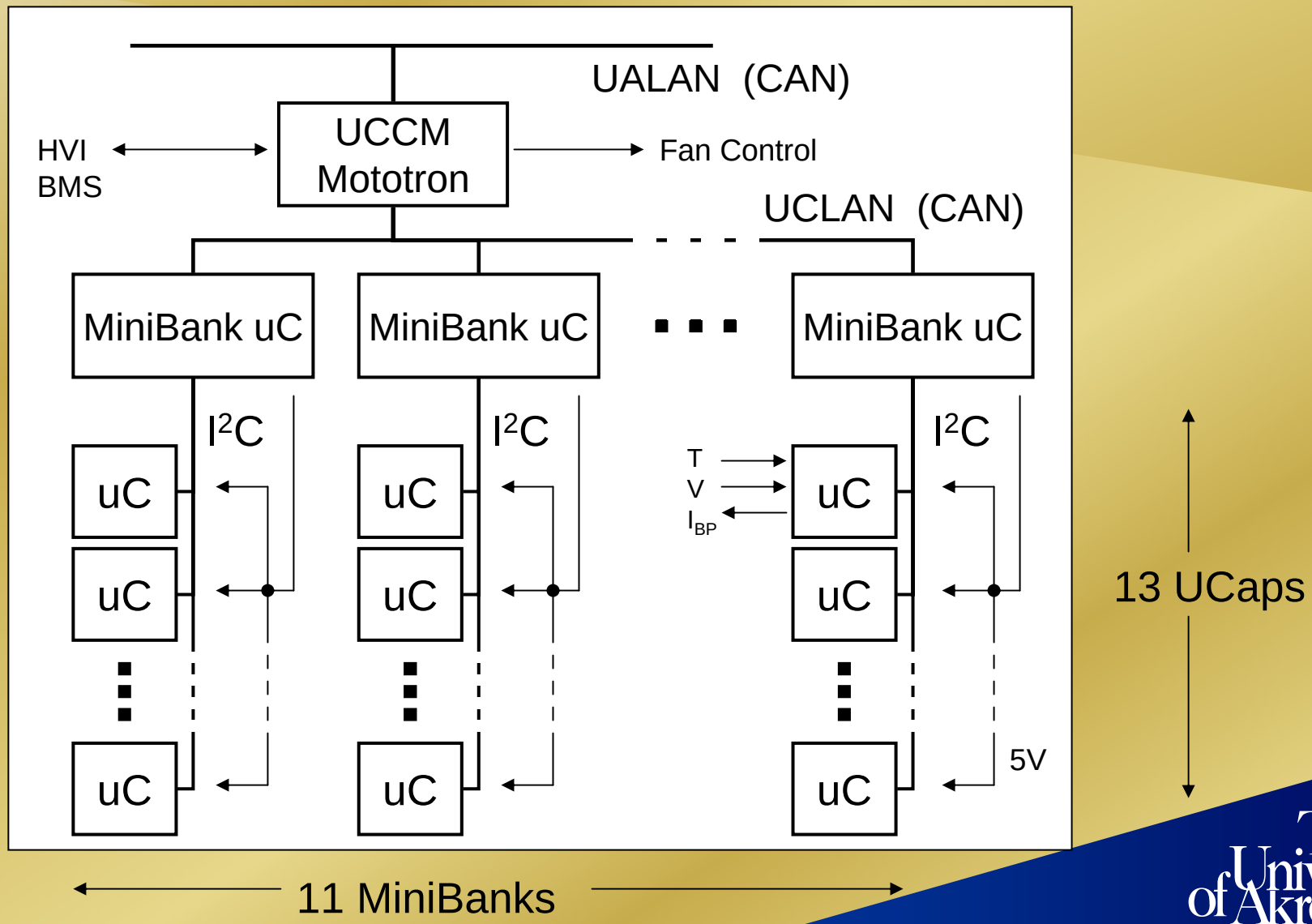

The University of Akron

CPM uC Unit

- *I2C To/From each PIC12F683 uC*
- *Sense Cell V, T*
- *Control I_{BP}*
- *Acitve or Passive Cell Protection*
- *Small, High density PCB*
- *Dedicated protection circuit for each capacitor*
- *Bypass starts at 2.606V*

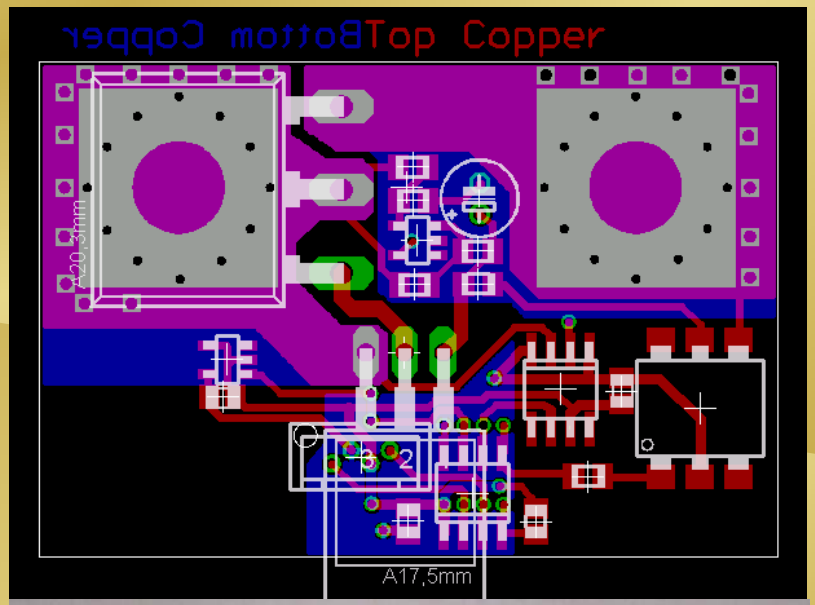

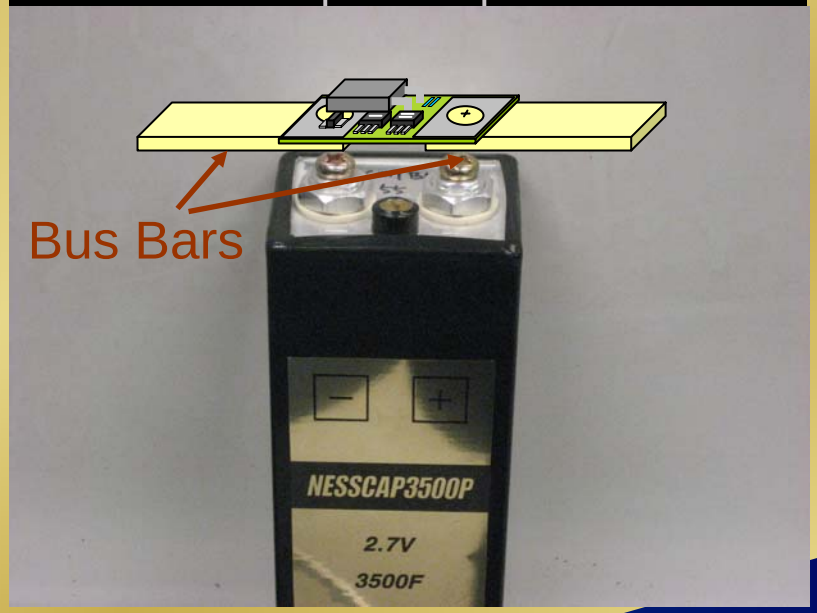

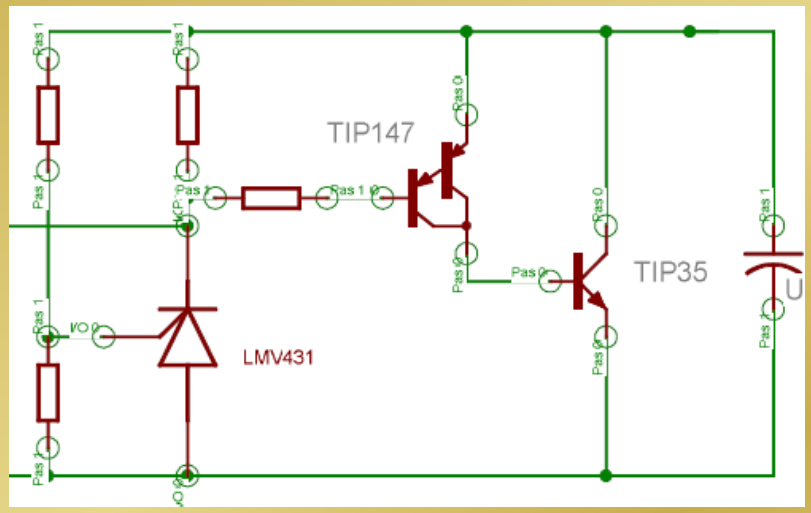

The University of Akron

Cell Protection and Management Unit

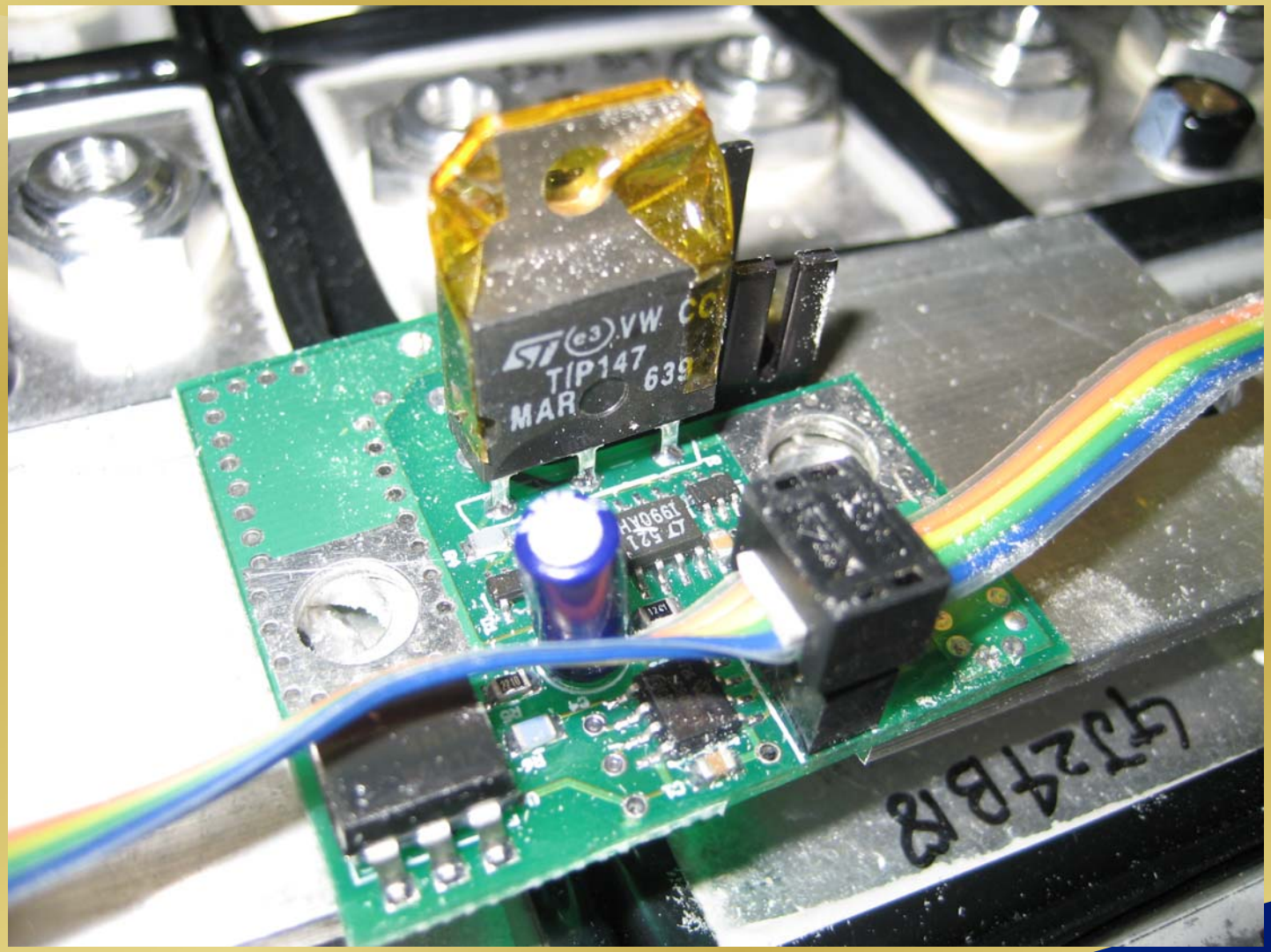

The University of Akron

Cooling fans: use fuzzy logic controller

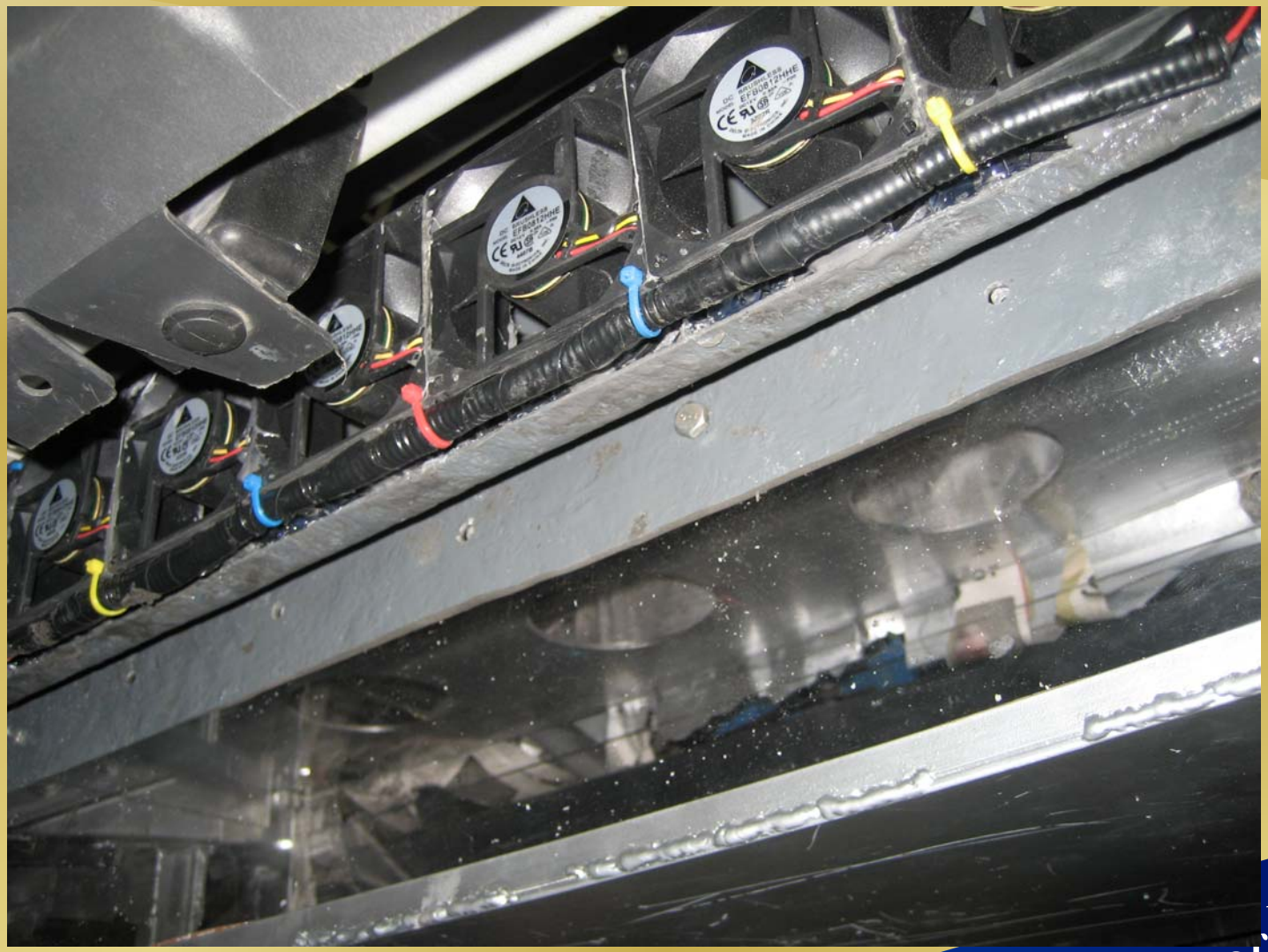

The University of Akron

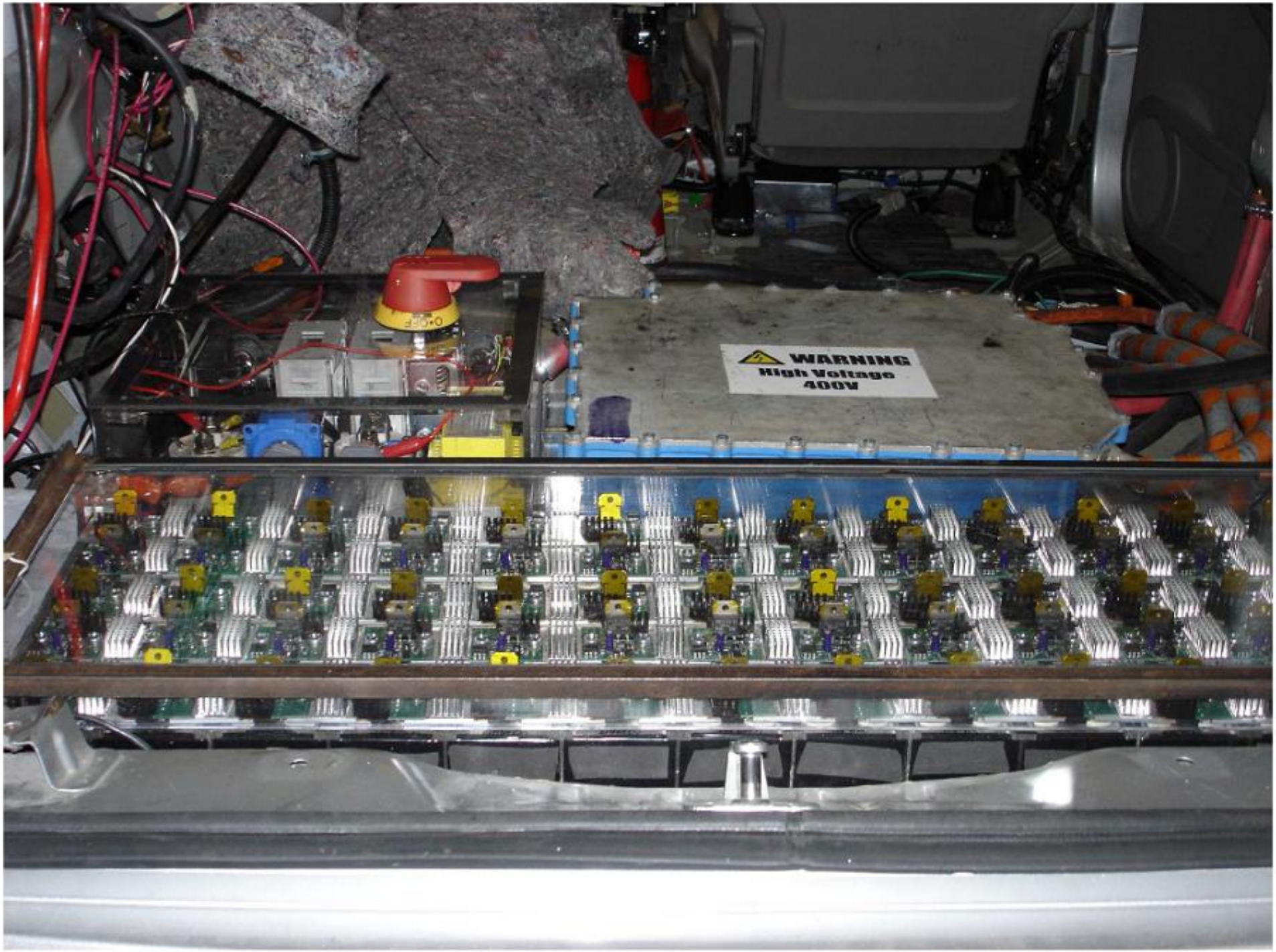
WARNING
High Voltage
400V

High Voltage Interface and Bank Management System

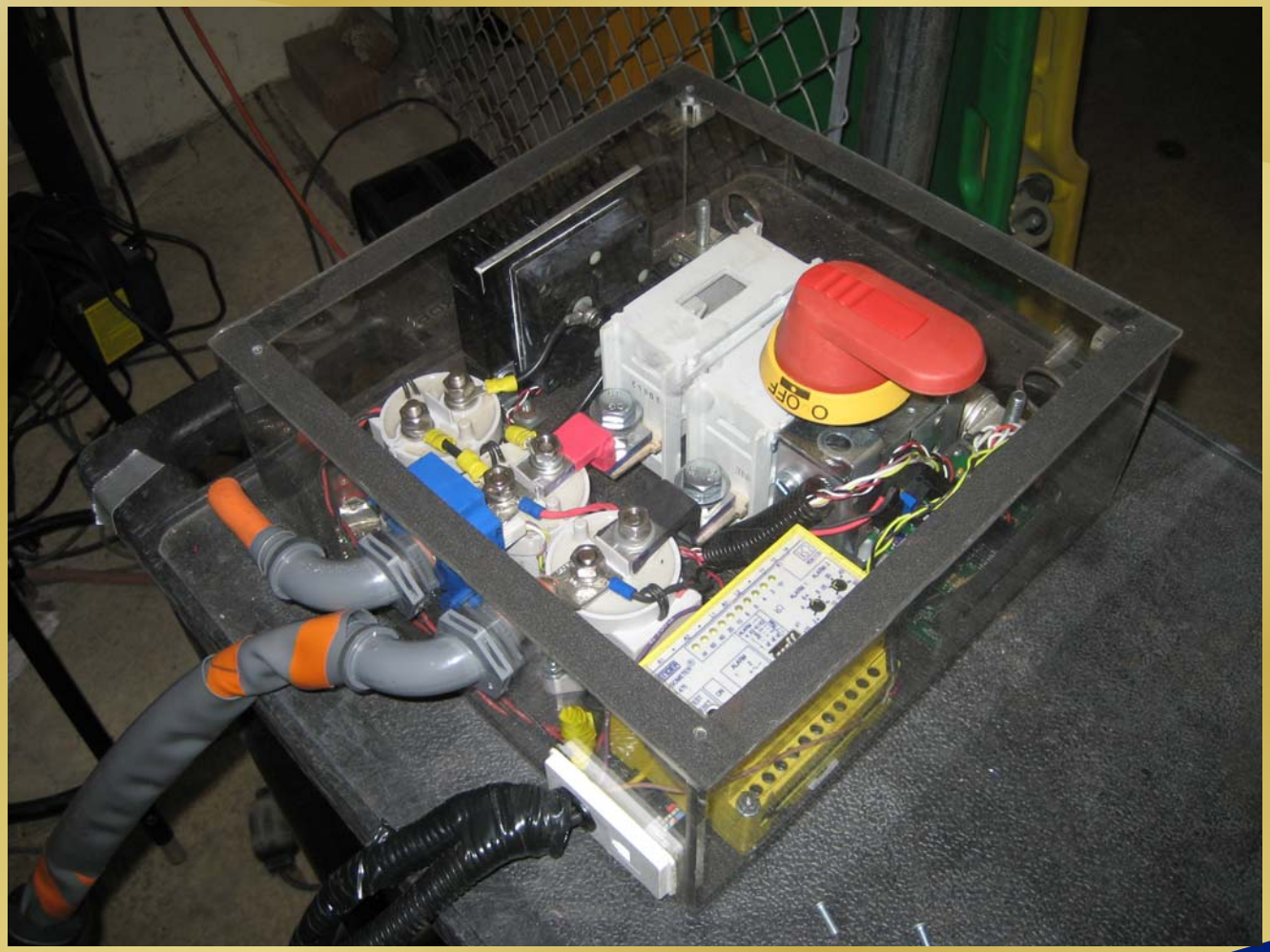

The University of Akron

UCCM Fault Accomodation

System Faults

Bus Undervoltage: warning below 100V
Bus Overvoltage: warning at 372V, disconnect at 386.1V
Excessive Temperature: warning at 50C, disconnect at 60C
Excessive Current: warning at 360A, disconnect at 400A
Lifetime Warning: warning if ESR and Cap go +/- 20%rated
Ground Fault Warning

Cell Faults

Cell Undervoltage: Disconnect for any cell reversal
Cell Short or Open: Disconnect for any
Sensor Failure: Observers used for lost CPM

Communication Faults

UCLAN Lost: Cycle minibank power & use observers
UALAN Lost: Disconnect until found

The University of Akron

Control architecture

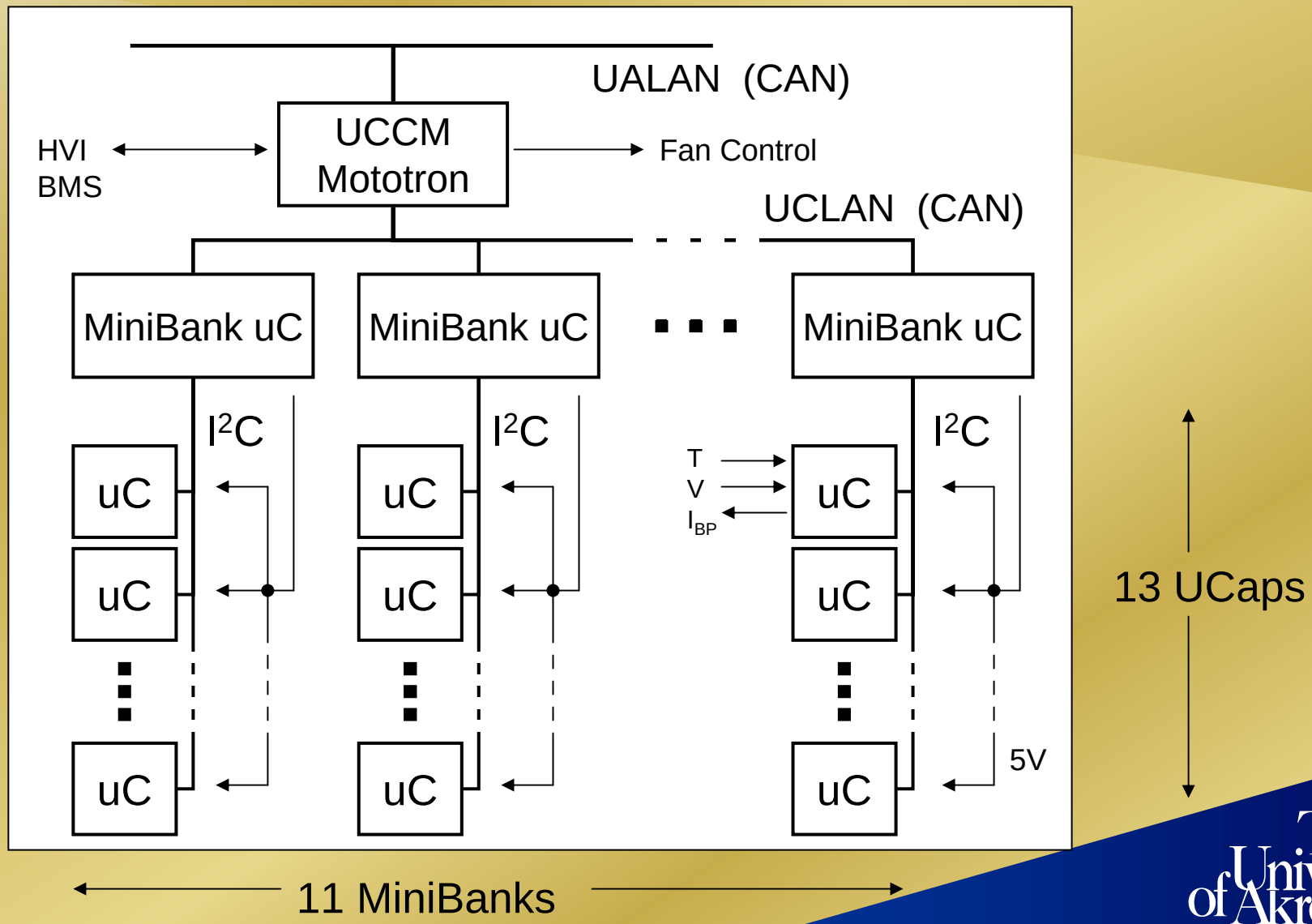

The University of Akron

CHARLEVOIX
AVL

- This work was supported by
  - University of Akron Dept. of ECE
  - University of Akron Challenge X
  - Challenge X Headline Sponsors (GM, DoE, etc)
  - Linear Technology
  - HI-TEC
  - Ridge Tool Company

The University of Akron

Vehicle Summary

- Engine and Transmission
  - 1.9L Volkswagen Turbo Direct Injection Diesel
  - 6 Speed Manumatic Transmission
- Emissions Aftertreatments
  - Diesel Particulate Filter
  - Selective Catalyst Reduction
  - Urea Injection
- Electric Motor Drives
  - 21/36kW PM BLDC Generator
  - 45/65kW Ballard IPT Motor
- Energy Storage System
  - 143 2.7V Nesscap Ultracapacitors
  - 12V Lead-Acid Optima Battery
- Electrical Energy Conversions
  - 400/14V Uni-directional 2.4kW DC/DC
- HVAC
  - Denso PMSM Scroll Compressor
- Communication and Control
  - Mototron Controllers
  - PIC Microcontrollers
  - TI DSPs
  - Alta-Vista Proto Board
  - Infineon Microcontrollers