QUALLION

Launcher Battery Pack

Mechanical Design

Powering Life.

Current Projects

- Qualified a Delta IV 32V pack using COTS lithium-ion cells
  - 5.4Ah, high power
  - 11 lbs
- Separate 28V, 150V & 270V high power packs in one battery enclosure using Quallion cells
  - 28V – 9.9Ah, 150V & 270V – 3.3Ah
  - EDU & Qual unit complete with Qual battery to be subjected to the environmental loads in December 2007; Four flight units to be built in first half of 2008
  - Total pack weight is 60 lbs
- Developing a low profile 28V qualification pack

Launcher Battery Pack

Design

1. Battery Connection
2. Inner Battery Pack
3. Environmental Shock Vibration and Acceleration Damping Solution
4. External Case Assembly
5. Weight and Materials

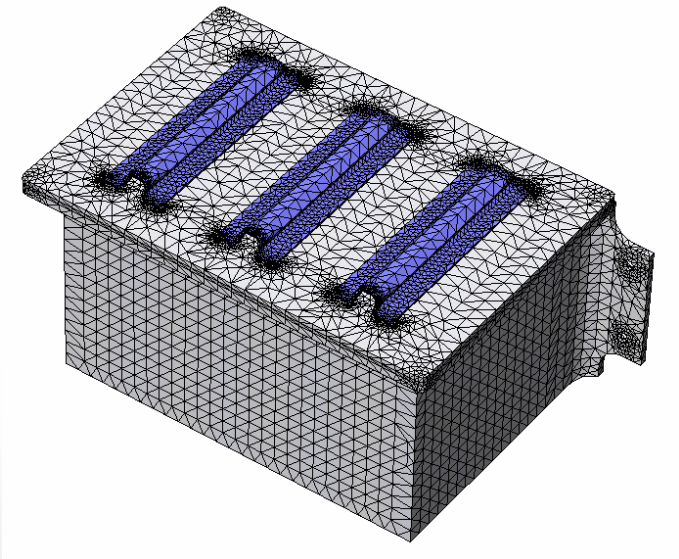

Launcher Battery Pack

1. Inner Battery Connection

- The battery pack configuration requirements are 9S 2P to obtain 5.4 Ah
- The batteries are arranged in 6 X 3 matrix for the 9S 2P configuration
- The connection between the cells is a web of a Ni tabs. Laser welding process is used to create the connection between two batteries. The orientation of the polarities of the batteries is established to gain the 9S 2P setup in the smallest footprint possible.
- Laser welding creates a fusion connection between the tabs. In a Fusion Bond, either similar or dissimilar materials with similar grain structures are heated to the melting point (liquid state). The subsequent cooling and combination of the materials forms a “nugget” alloy of the two materials with larger grain growth. The bonded materials usually exhibit excellent tensile, peel and shear strengths.
- The design of the webbing needs to be a function of the total resistance and the current traveling through the material.

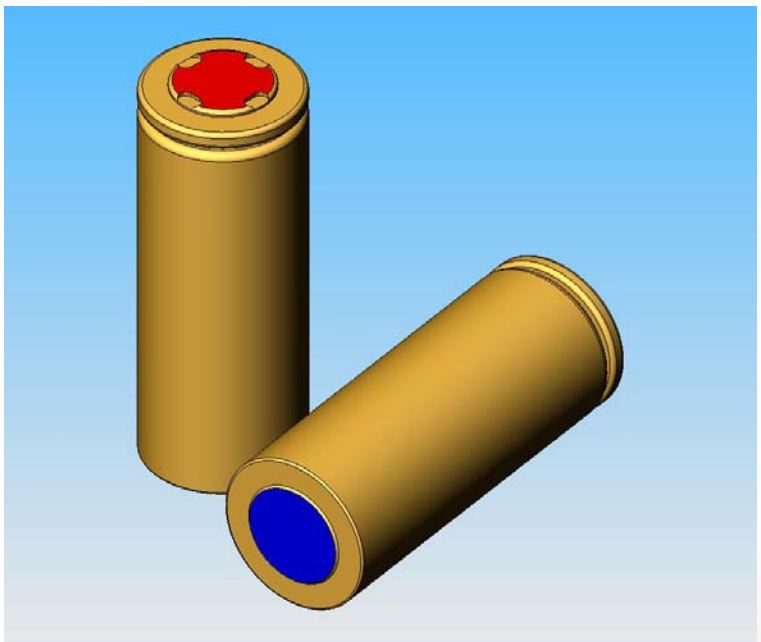

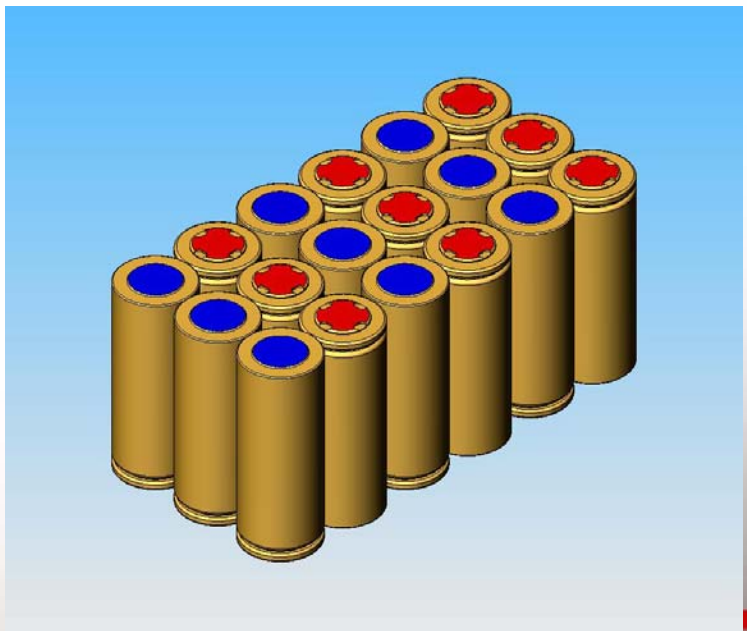

Launcher Battery Pack

2. Battery Pack

- The battery pack matrix welded with the tabs to the individual cells is placed into a inner casing.
- The inner casing is made out of a polymer material to create a protective insulated shell around the battery pack. This inner case is flexible and resistant to the environmental and electrical requirements.
- The battery 9S 2P matrix is fitted inside the inner casing, the cells have to be protected during the assembly from any mechanical and electrical damage.
- The casing is a combined top and bottom shell constrained by spacers placed between the cells. These spacers are pulling together the top and bottom inner casing through counter sink head screws to save space.
- The battery pack with the inner casing forms a solid entity floating inside the outer casing.
- The cells are electrically monitored at all times during the operation of the battery pack; this was made possible by attaching the cell wires which are inserted into the connector pin sockets.

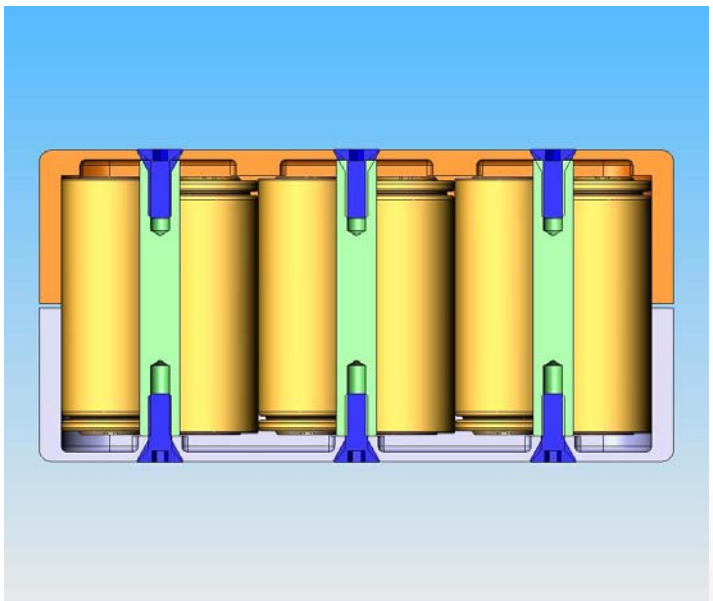

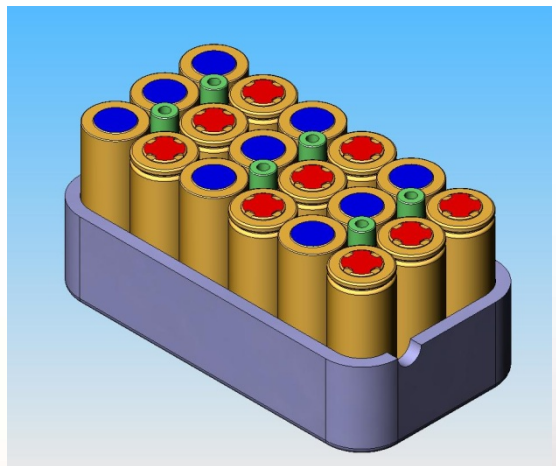

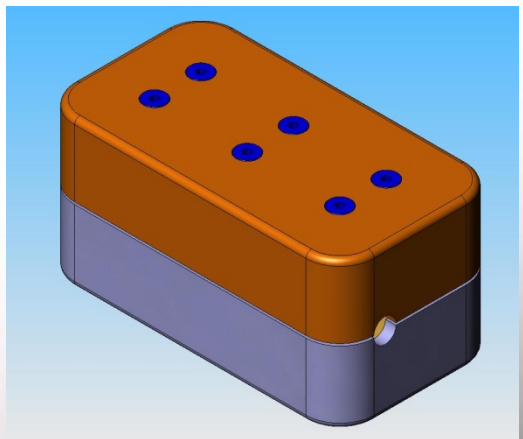

Launcher Battery Pack

3. Shock, Acceleration and Random Vibration Damping Solutions

- The inner battery pack is suspended onto “L” shaped mounts, shock and vibration dampening absorbent material
- The shape, size, relative stiffness and hardness of these damping inserts are established based on engineering calculations which are functions of the environmental loads. The key factor in the design is the natural frequency of the assembly.
- There are 8 mounts installed on the edges of the inner pack. The mounts are compressed for optimal vibration damping. The design accommodates this compression factor.
- Below shows a few examples of the random vibration, acceleration and shock requirements. The assembly was physically tested at the certified testing facility and met these requirements.

Proposed Vibration Levels

Frequency (Hz)	Qualification Levels
10 – 20	0.08 G2/Hz
20 – 40	3.0 dB/octave
40 – 60	0.16 G2/Hz
60 – 80	4.2 dB/octave
80 – 300	0.24 G2/Hz
300 – 400	12.6 dB/octave
400 – 600	0.80 G2/Hz
600 – 2000	-9.8 dB/octave
2000	0.016 G2/Hz
Overall Grms = 21.7	

Proposed Shock Levels

	Response Spectrum
Frequency (Hz)	Levels (Q=10)
100	80 G
100 - 800	+7.3 dB/Octave
800 - 3000	1000 G
3000 - 5000	+6.3 dB/Octave
5000 - 10000	1700 G

Acceleration

Steady state acceleration of 24.0 G for min. 360 sec. for the X Axis only (flight direction), perpendicular to the cover, the cover is facing upwards.

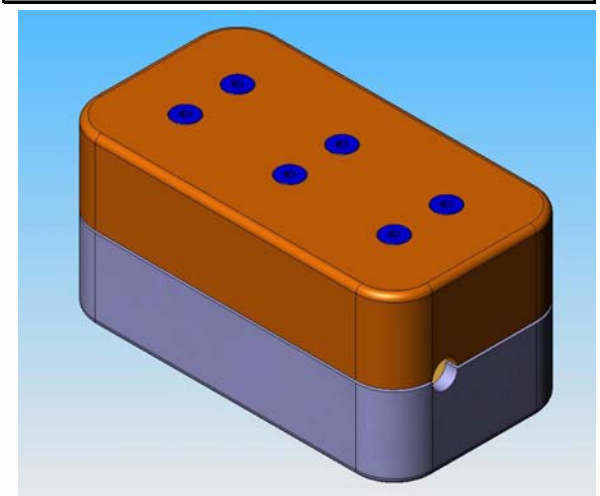

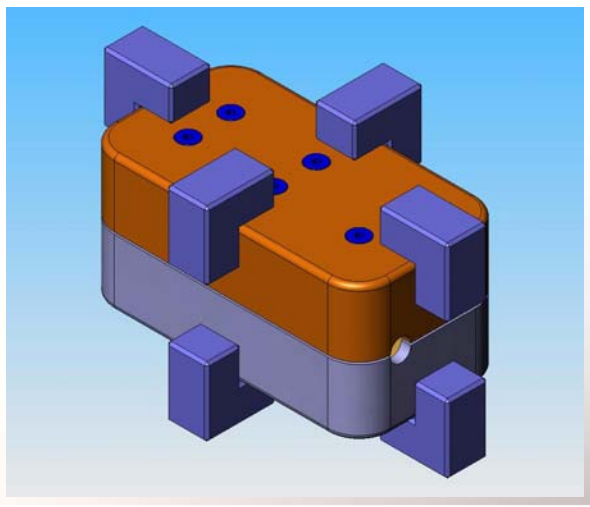

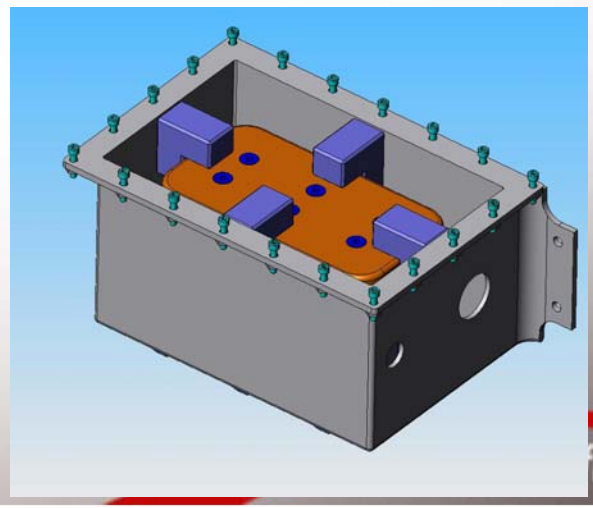

Launcher Battery Pack

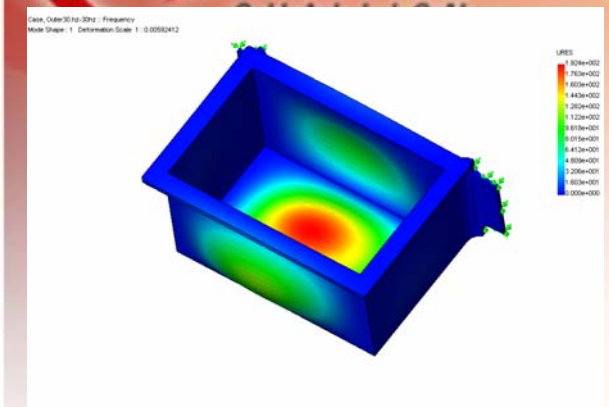

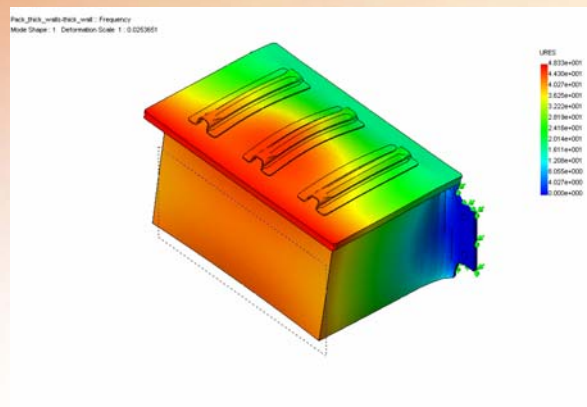

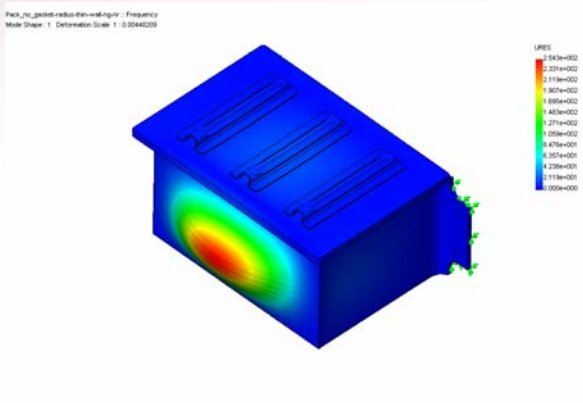

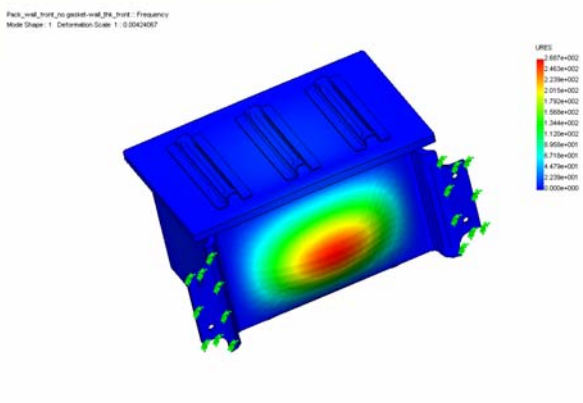

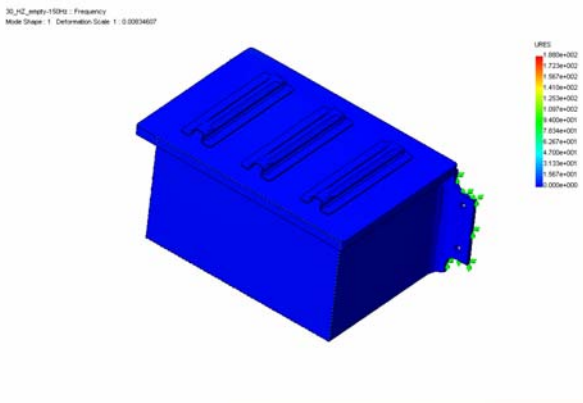

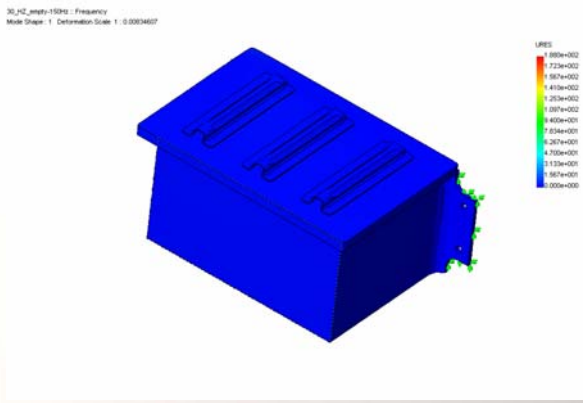

Design Process of the Case and the Assembly

1. The case is designed and tested with the Cosmos Works Finite Element Analysis Software for optimization.
2. These figures are showing the case put through the vibration environmental testing and the process flow of design optimization.
3. The case from the original design (due to failure) during the simulation is redesigned, by eliminating the stress risers and weak points on the questionable surfaces areas.
4. The design reaches a “pass” stage after which the optimization is continued to reach the safety factors needed.
5. The design is finalized and ready for detailing.
6. Shock and acceleration simulations are performed as well to pass all the needed environmental requirements
7. After several iterations, a final design is chosen to be built and tested in real shock, vibration and acceleration conditions.

Launcher Battery Pack

4. External Case Assembly

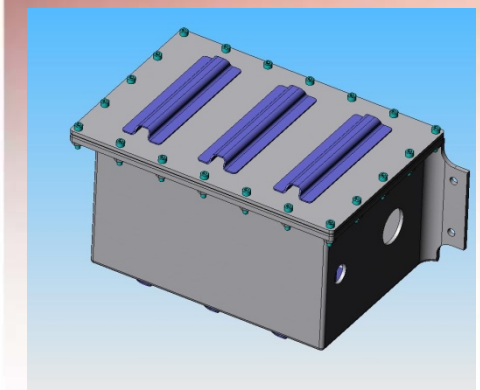

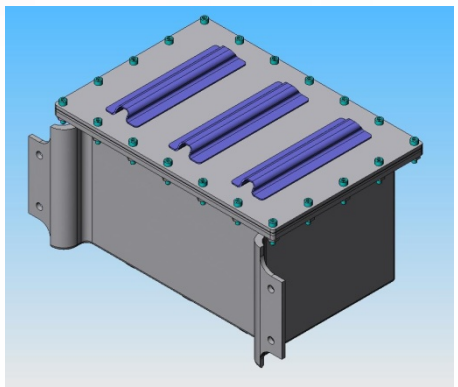

- The external case assembly is formed from the case, the ring-gasket and the cover.
- The case is a one piece machined aluminum box fitted with a flange on the top side.
- There are two mounting brackets located on the back of the case.
- The ring gasket houses the rubber “O” ring and is sandwiched between the cover and the flange of the case.
- The cover is constrained onto the case with screws and washers. Once the screws are tightened the “O” ring inside the ring-gasket is squeezed between the case and the cover creating a tight seal. The cover is reinforced with aluminum extrusions for strength purposes, similar design is applied onto the bottom of the case.
- On the side of the case is a connector attached which establishes the communication between the battery pack and the exterior. Each battery is monitored for its performance through that connector.

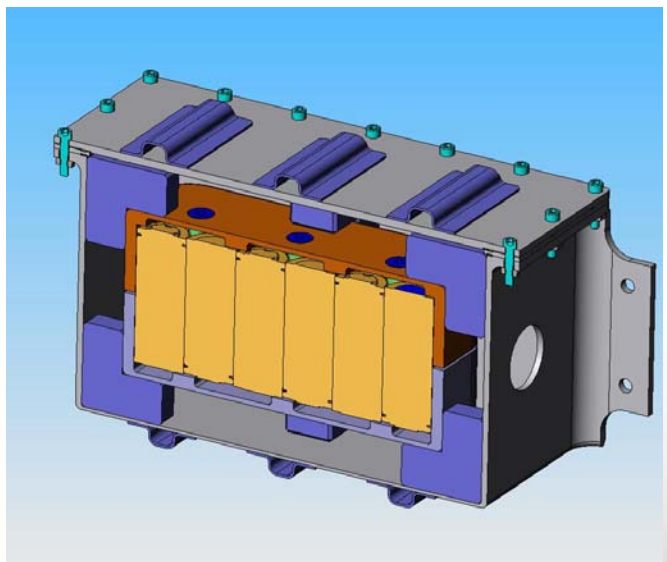

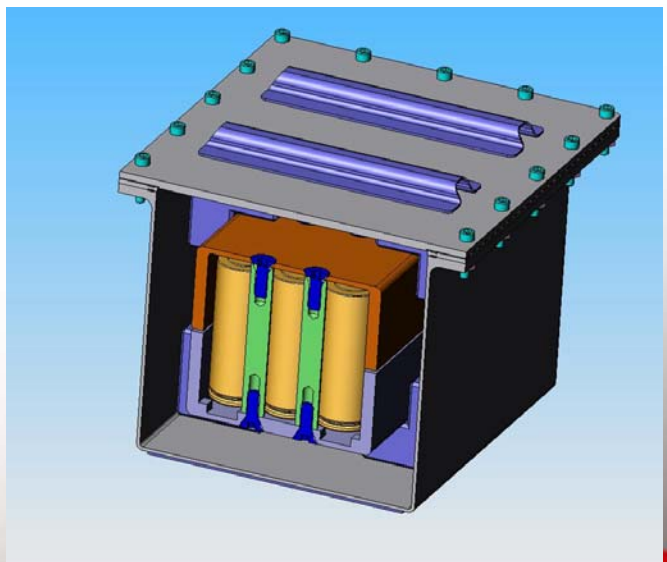

Launcher Battery Pack

5. Weight and Materials Summary

- Weight plays an important role in any application especially aerospace.
- The table below summarizes a preliminary analysis of the overall battery pack weight and components.

item	Description	qty	weight g	Weight lb/unit	Weight lb/pack
1	Inner Case upper	1		0.4783	0.4783
2	Inner Case lower	1		0.4783	0.4783
3	COTS cells	18	110.00	0.2425	4.3651
4	Pack spacer	6	8.50	0.0187	0.1124
5	Screw inner	12	5.00	0.0110	0.1323
6	Case Al	1	1023.45	2.3412	2.3412
7	Cover Al	1	377.98	0.9410	0.9410
8	Ring-Gasket SS + O ring	1	193.00	0.5500	0.5500
9	dampening material	8	47.87	0.1195	0.9562
10	Reinforcement rib	6	18.73	0.0400	0.2400
11	Connector exterior	1	38.00	0.0838	0.0838
12	cover screws nuts washers	20	6.35	0.0140	0.2800
13	Wire, tab	9	10	0.0220	0.1984
	Total weight				**11.157**

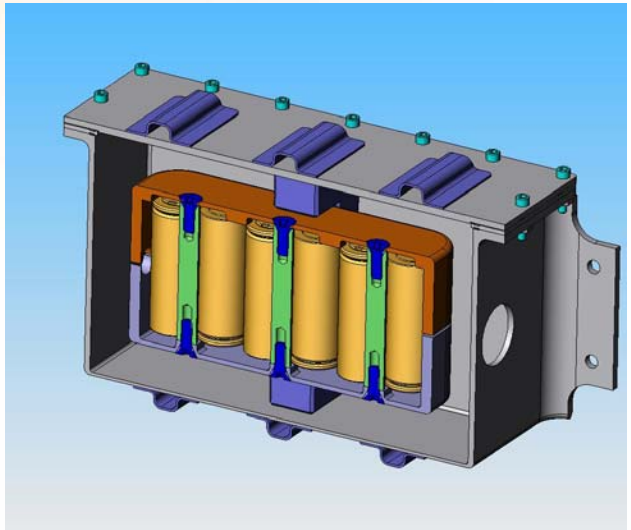

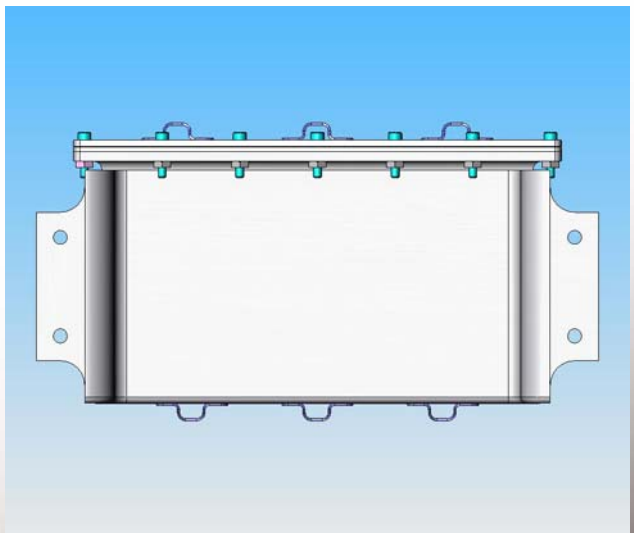

Launcher Battery Pack

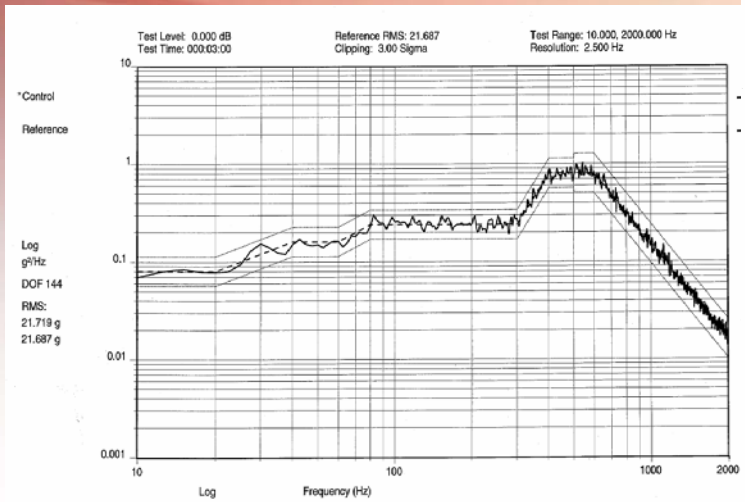

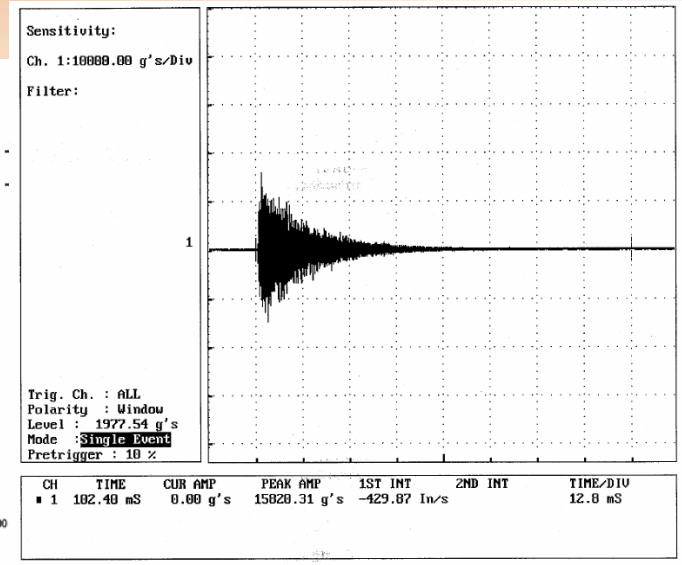

Environmental Testing

Examples of the results and the setup for the environmental testing that were performed on a real assembly.

The tested assembly passed all the environmental requirements per the customer specifications. The cells survived the acceleration, pyrotechnic shock, and the random vibration conditions without any changes in the electrical performance.

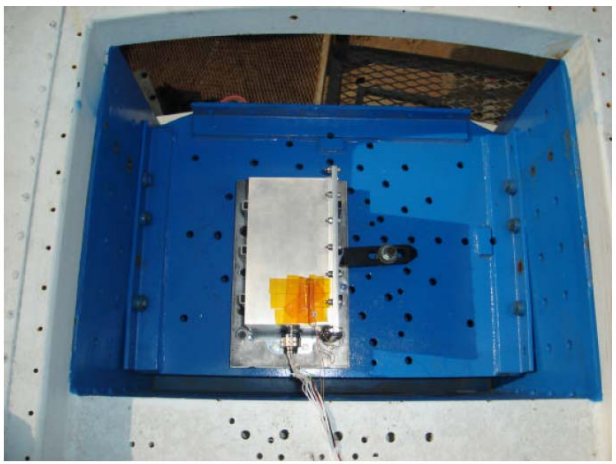

PHOTOGRAPH 1: ACCELERATION TEST SETUP - +X AXIS

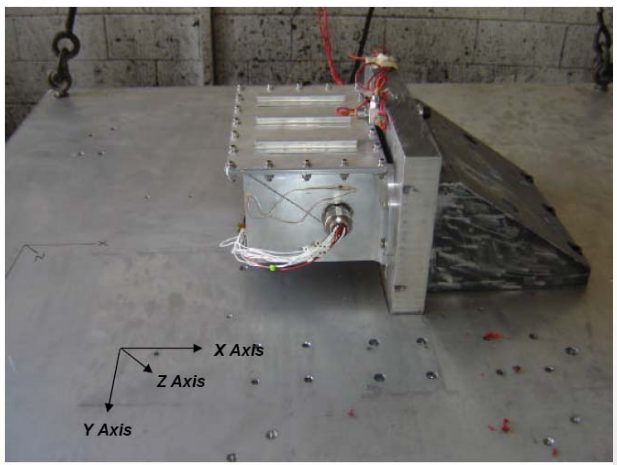

PHOTOGRAPH 6: PYROTECHNIC SHOCK TEST SETUP

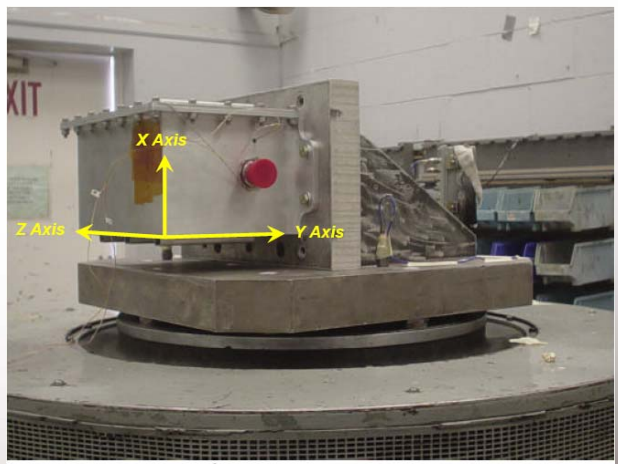

PHOTOGRAPH 3: RANDOM VIBRATION TEST SETUP - X AXIS AND AXES DEFINITION

Quallion Launcher Pack Capability Overview

- Founded in 1998 with plant located in Sylmar California
- First launcher pack developed and qualified in 2006
- Capable of integrating commercial or Quallion cells in a variety of configurations in our patented “box within a box” mechanical design
- Ability to rapidly design, fabricate and qualify a new launcher pack design in less than six months
- Full process, material and parts quality control & traceability for future flight pack production