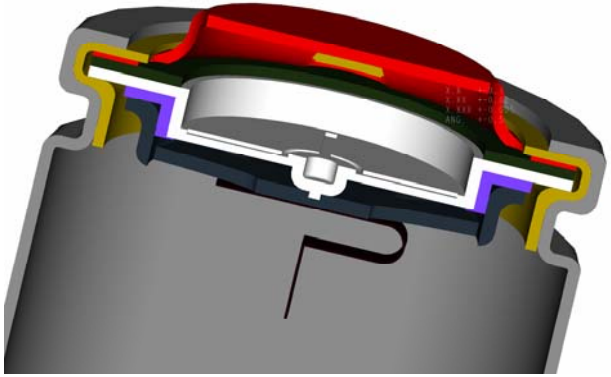

PTC Device Withstanding Voltage Thresholds

by
Eric Darcy, Frank Davies, Judy Jeevarajan, Gilbert Varela, and Pranav Patel, **NASA-JSC**
Brad Strangways and Tim Nelson, **Symmetry Resources, Inc**.
Jeremy Neubauer, **ABSL Space Products**

For

2007 NASA Aerospace Battery Workshop
Huntsville, AL

PTC Withstanding Voltage Test: Background

- Commercial Lithium Ion 18650 cells typically have a current limiting PTC (Positive Temperature Coefficient) installed in the cell cap to limit external currents in the event of an external short to the cell.
- The PTC consists of a matrix of a crystalline organic polymer containing dispersed conductive particles, usually carbon black. The resistance of the PTC increases with temperature (Positive Temperature Coefficient, PTC).
- The PTC has a resistance that increases sharply with temperature. When a short is applied to a cell, the elevated currents cause the PTC to self-heat and move to a high resistance state in which most of the cell voltage is across the PTC but the current is significantly reduced. As long as the short is maintained the PTC produces enough heat to keep itself in this state (lower current being offset by greater voltage drop across PTC).

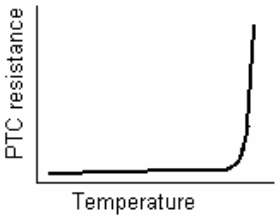

Single Cell Short:

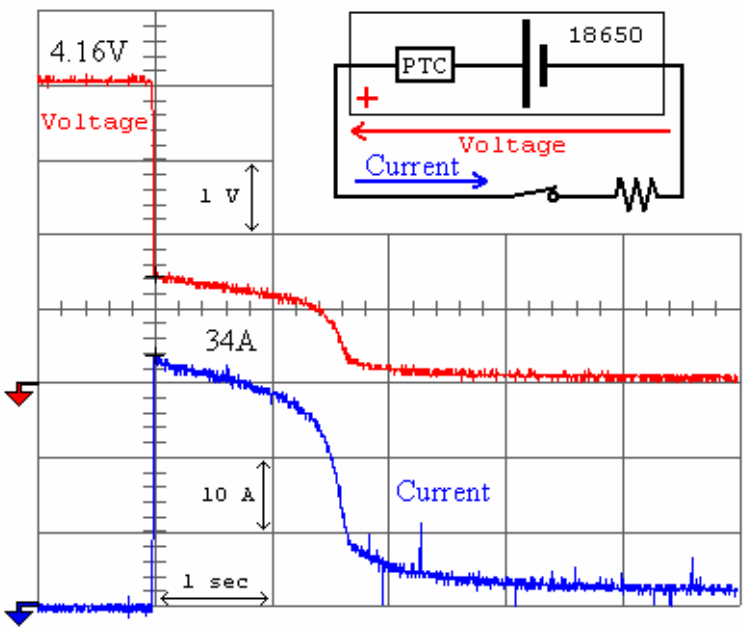

Cell Design Features for Abuse Tolerance

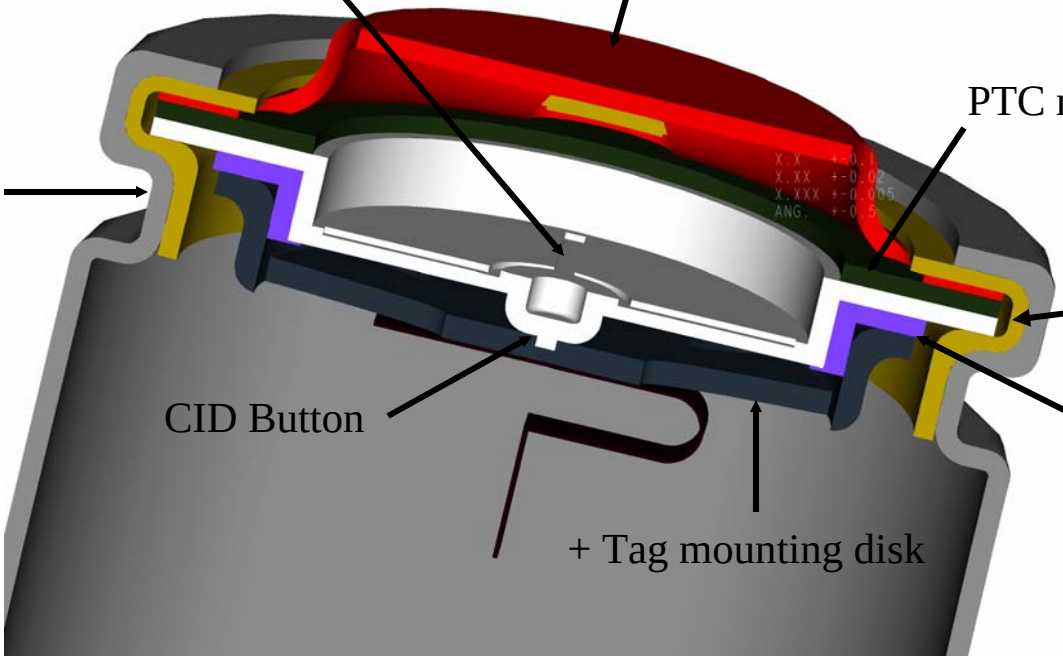

Example high voltage circuits incorporating cells with PTCs:

High voltage cell string w/ short circuit

Notes:

•The example battery system presented here is of limited size and complexity for clarity. Cells charged to 4.0V for clarity.

•The tripped PTC is in a high impedance state with 24V across it. This may exceed the rated voltage of the PTC and result in behavior not present at lower voltages.

• Dissipation of PTC:
24V * 0.1A = 2.4W

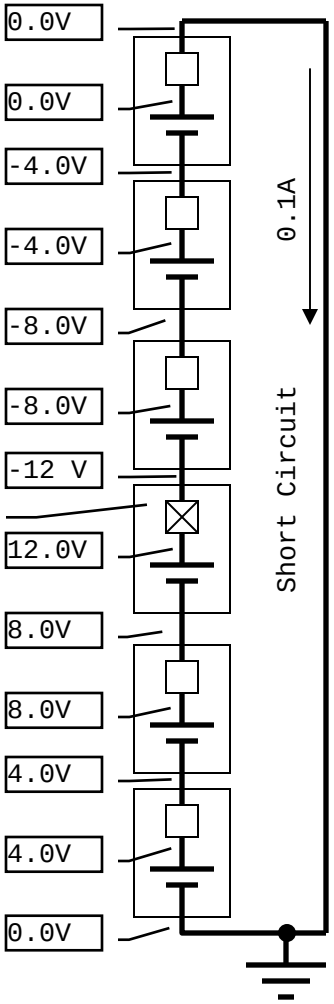

Short on cell string with diodes to limit PTC voltage:

Notes:

•More than two battery cells per substring may be used.

•More than 3 substrings may be used.

•The example battery system presented here is of limited size and complexity for clarity. Cells charged to 4.0V for clarity.

•Each of the three PTCs is dissipating nearly 2W.

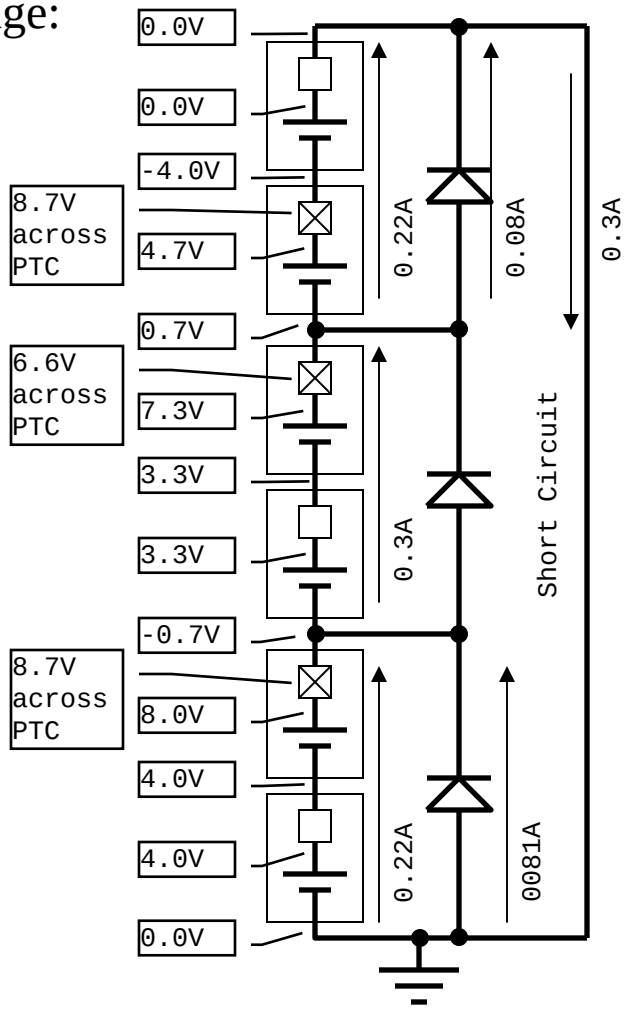

Potential damaging effects of a tripped PTC on a cell:

- Thermal damage:
  - When the PTC is tripped, it maintains a leakage current through it that, combined with the voltage across it, causes heat dissipation in the PTC that holds it at its transition temperature. In practice the heating power is 2 to 3 Watts and the transition temperature somewhere above 60°C (depends on cell design).
  - The leakage current (and heating) stops when the short is removed or when the cells are completely discharged.
  - The PTC is in very close proximity to the cell crimp seal, and the heating may cause damage to the seal.
- Mechanical damage:
  - The PTC expands slightly in thickness (approx 5%) when it is tripped. This may put additional stress on the seal.

PTC Withstanding Voltage Test

- Purpose – Determine the voltage threshold at which cell PTC will emit odor, leak liquid electrolyte, and/or suffer irreversible damage during/after a short circuit
- Irreversible damage defined as > 3-fold resistance increase from pre to post test
- Cell designs tested
  - Moli ICR-18650J
  - Panasonic CGR-18650C
  - Sanyo UR18650F
  - Sony 18650HC
- Tests are conducted with n high power 18650 cells in series, charged to 4.1V/cell, to drive the required voltage through the cell under test, resulting in n+1 cells in series
- Cell under test charged to 4.2V
- Adjust resistance of short circuit loop to achieve ~16A in-rush current with each cell design
- Continue test with cell in tripped state 60 minutes after maximum temperature is achieved
  - Typically cells equilibrated at 72-77 ºC at top of cells and 60-64 ºC at bottom

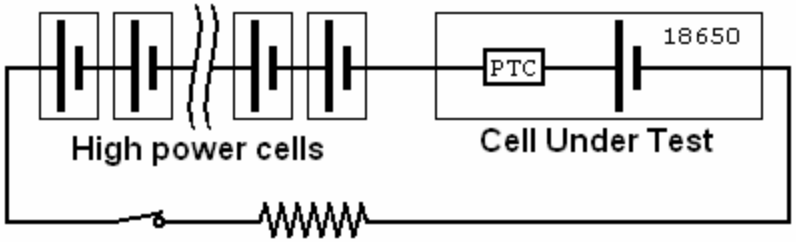

Note: All 4 cell designs performed per manufacturer's specifications. The results herein are intentional off-limits tests to determine design margins.

Test Set-up at SRI (Arab, AL)

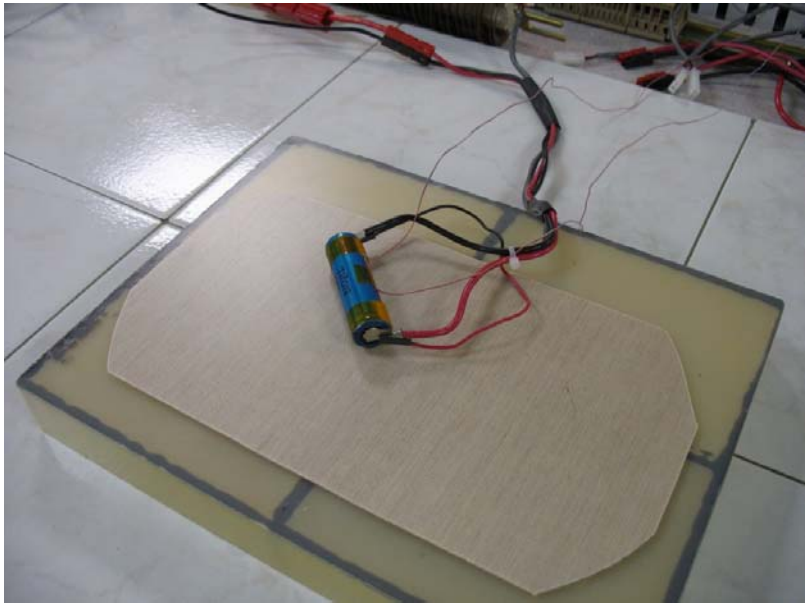

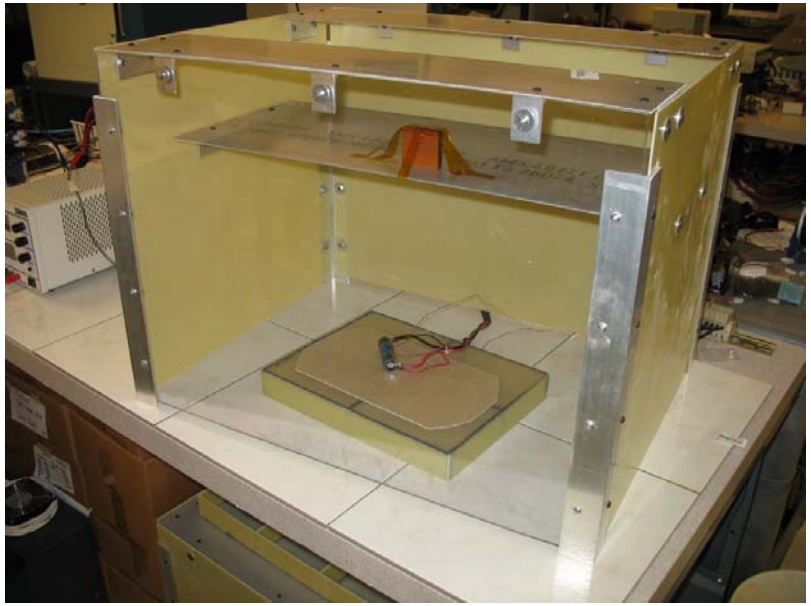

PTC Withstanding Voltage Test Results

- Measured the untripped PTC resistance of the each cell design
  - Moli ~ 21.9 mohms
  - Panasonic ~ 13.4 mohms
  - Sanyo ~19.1 mohms
  - Sony HC ~22.4 mohms
- Moli results
  - 7S is maximum series count to prevent PTC damage and leakage (n=3)
  - 4S is maximum series count to prevent slight odor from seal (n=3)
- Sanyo results
  - 3S is maximum series count to prevent PTC damage (n=3)
  - 8S is maximum series count to prevent odor from seal (n=3)
- Sony results
  - 3S is maximum series count to prevent PTC electrical damage (n=3)
  - 10S is maximum series count to prevent smoking the PTC (n=1)
  - at 11S, seal damage led to an internal short (n=1)
  - Its PTC has the slowest tripping transition
- Panasonic results
  - 7S yields no odor, no leakage, but slight electrical damage (n=3)
  - 11S and 15S yields no odor, no leakage, but some electrical damage (n=1)
- Within 24 hours after the test, Sony and Sanyo cells recovered from these tests with an erratic AC impedance found to be independent of number of series cells and of the long trip hold, this was not the case for the Moli or Panasonic cells. However, the erratic effect goes away after 24 hours.

Electrical damage defined as > 3-fold increase in PTC resistance

S = total cells in series

n = # of test runs

Sony HC cell – At 11S, PTC tripping power is estimated at 20W, followed by 3W to stay tripped. This caused seal damage leading to an internal short.

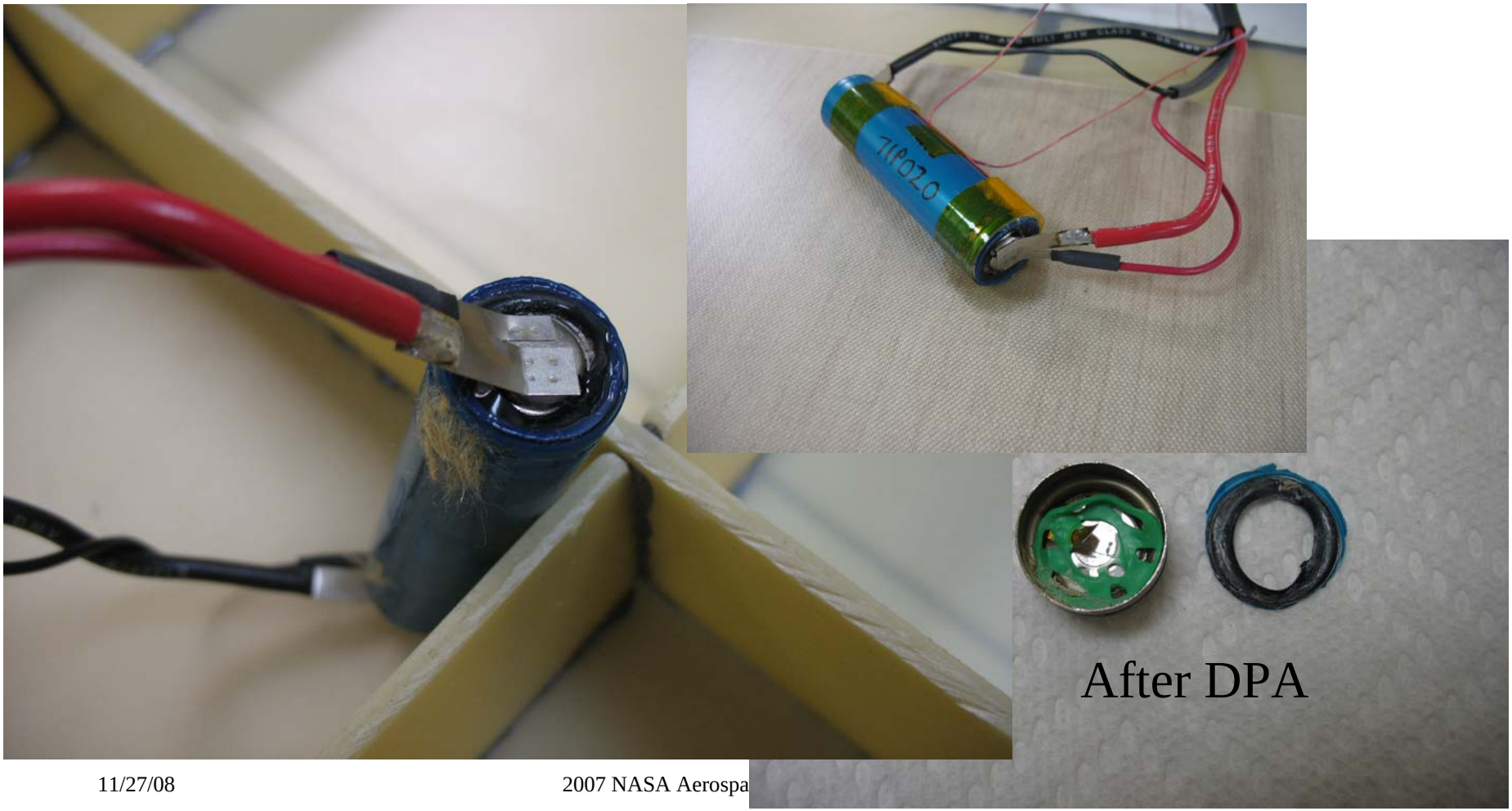

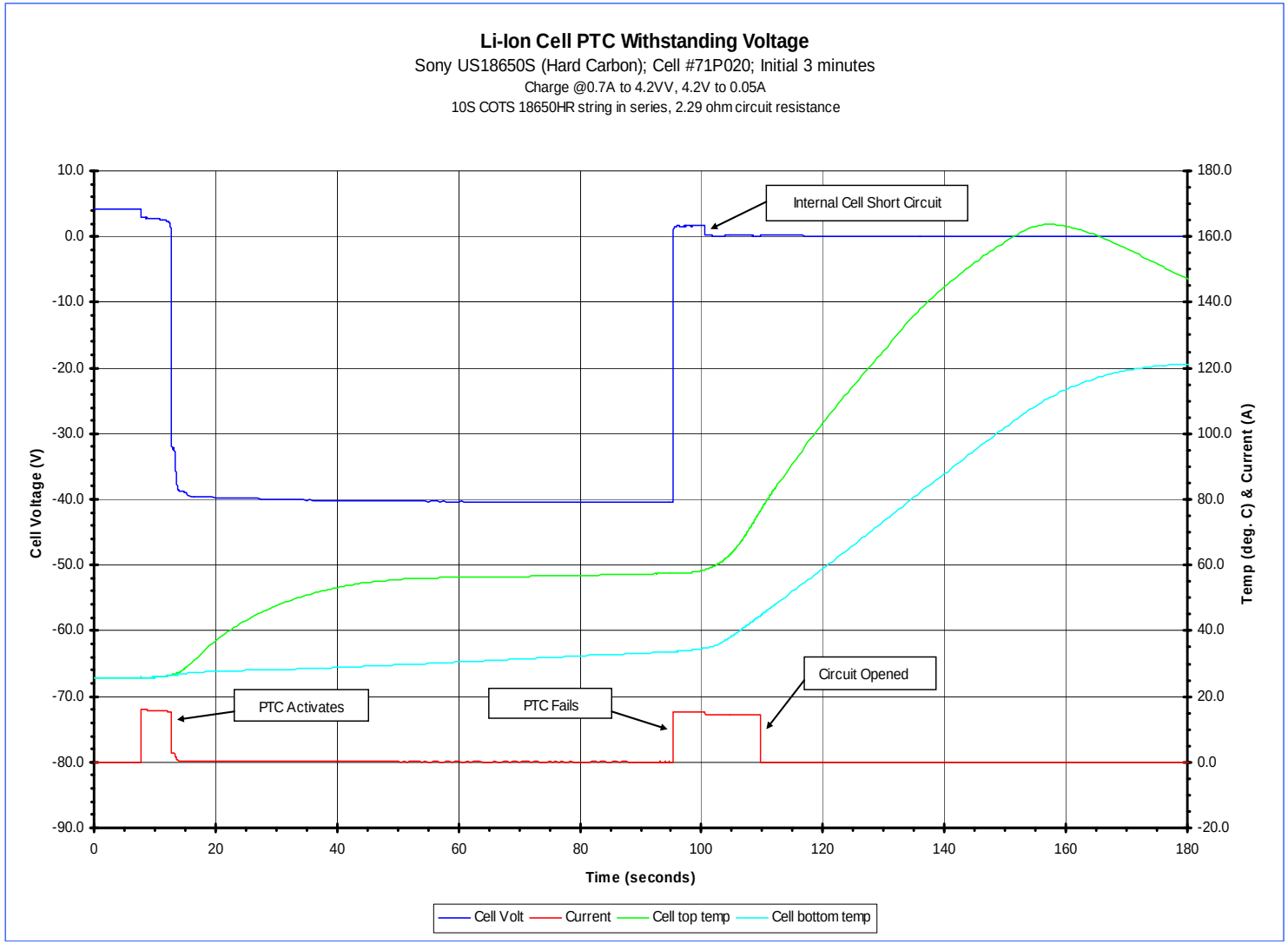

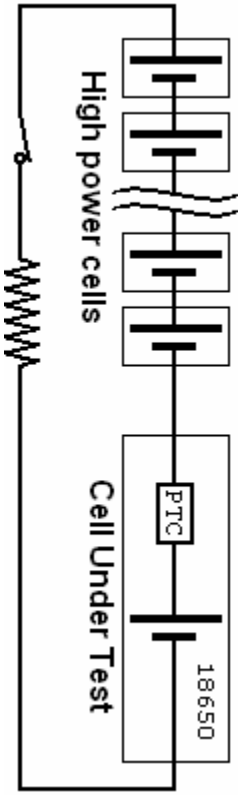

An overwhelmed PTC can fail and internally short its cell

Video of 11S Sony HC Cell Test

Power dissipated in PTC is sufficient to damage seal and cause an internal short
Note – Single cell test conditions observed because cell under test is isolated.
If this had occurred in a battery with high cell packaging density, results would be different (better or worse)

12S Sony Test Results in its PTC being benignly “smoked”

More power instantly overwhelming the PTC leads to a more benign result

Conclusions To Date

- Verifying the withstanding voltage limits of the PTC device in commercial lithium ion cell designs is necessary to assure safe battery designs.
- The PTC device is a thermal regulator which under tripped conditions dissipates 3.2 to 3.5W
  - This heat must be properly dissipated in large, dense battery designs to ensure safe over-current protection
- Of the four commercial designs tested;
  - Moli and Panasonic PTC designs demonstrated the highest withstanding voltage threshold
  - Panasonic crimp seal demonstrated the highest hermeticity threshold
- The Sony and Sanyo PTC designs temporarily do not recover to a stable AC impedance after being tripped, while the Moli and Panasonic designs did.

Future Work

- The crimp sealed header assemblies of cells with PTC that demonstrated threshold limits during our test have been removed from the cells to allow
  - Leak testing
  - Destructive Physical Analysis
- The goal is understand how and why
  - The Sony and Sanyo designs don’t recover to a stable impedance after tripping
  - The Panasonic seal performed best under these tests
- Use the trip performance data obtained for thermal modeling short circuit conditions in large small cell battery packs

Acknowledgements

- ABSL provided the Sony and the COTS high rate cell
- MPS provided the Panasonic cell
- Quallion provided the Sanyo cell