COTS Li-Ion Modular BMS Capabilities

Presentation at the 2011 NASA Battery Workshop

by

David A. White

Southwest Electronic Energy Group

12701 Royal Drive

Stafford, Texas

281-240-4000

www.swe.com

COTS Li-Ion Modular BMS Capabilities Overview[1]

I. Two Modular Battery Management System (BMS) Architectures
   - A. Central
   - B. Distributed
   - C. Comparison of Architecture Characteristics

II. Distributed BMS Module Block Diagram

III. Distributed BMS Capabilities
   - A. Std Safety
   - B. Gas Gauging
   - C. Charge Control
   - D. Intra-Module Balancing[1]
   - E. Inter-Module Balancing[1]
   - F. Cell Short Detection[1]
   - G. Module Bypass[1]
   - H. Status & Control Com Port

IV. Questions?

1. METHODS DISCLOSED IN THIS PRESENTATION ARE PROTECTED UNDER US PATENTS 7,157,881; 7,199,556; AND OTHER US AND FOREIGN PATENTS AWARDED OR PENDING.

I. Modular Architectures

A. Centrally Controlled BMS

CENTRAL BMS CONTROL

236 VOLT, 200 - 240 AH LI-ION BATTERY PACK WITH >64KW CONTINUOUS OUTPUT POWER

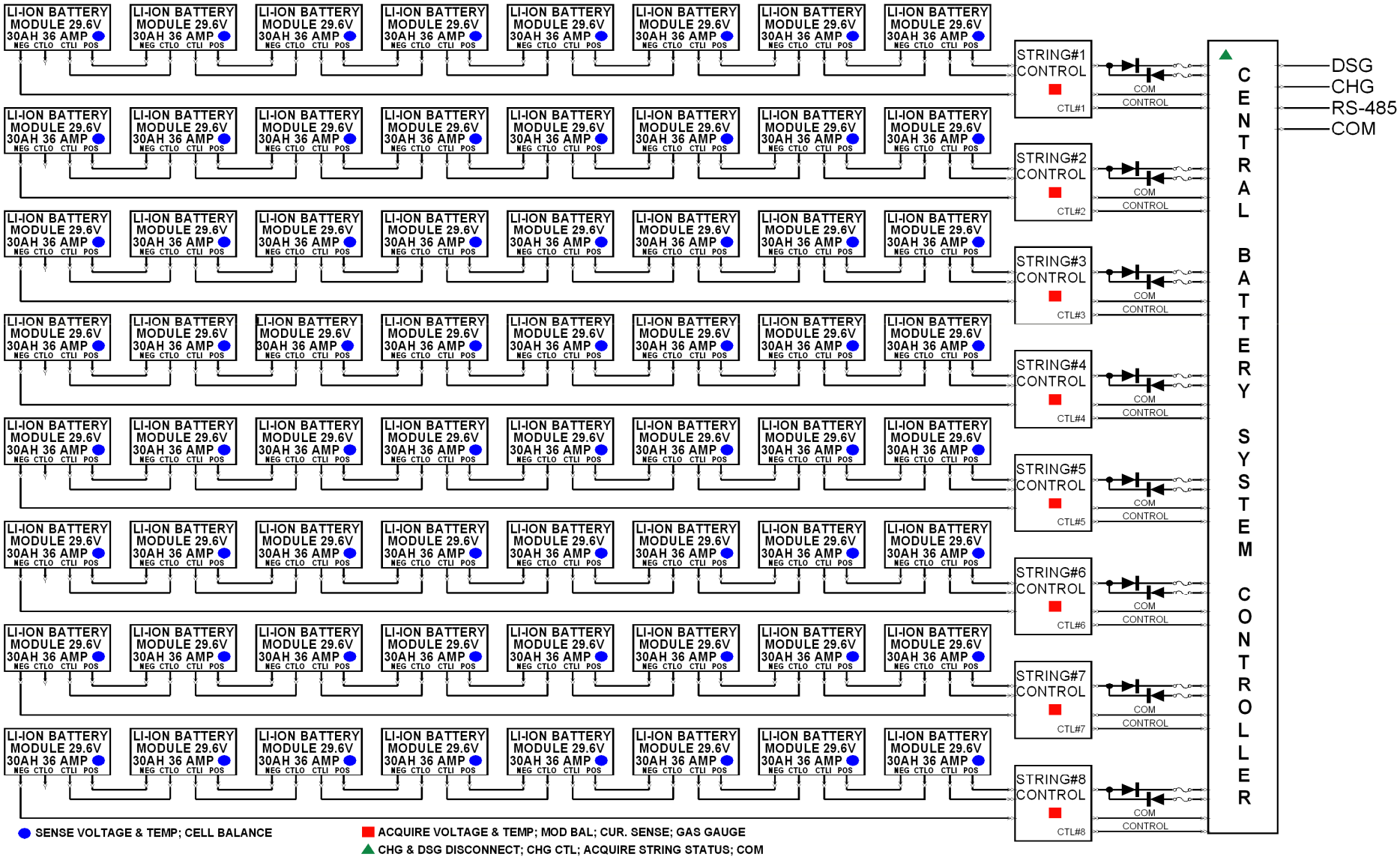

I. Modular Architectures

B. Distributed BMS Control

DISTRIBUTED BMS CONTROL

236 VOLT, 200 - 240 AH LI-ION BATTERY PACK WITH >64KW CONTINUOUS OUTPUT POWER

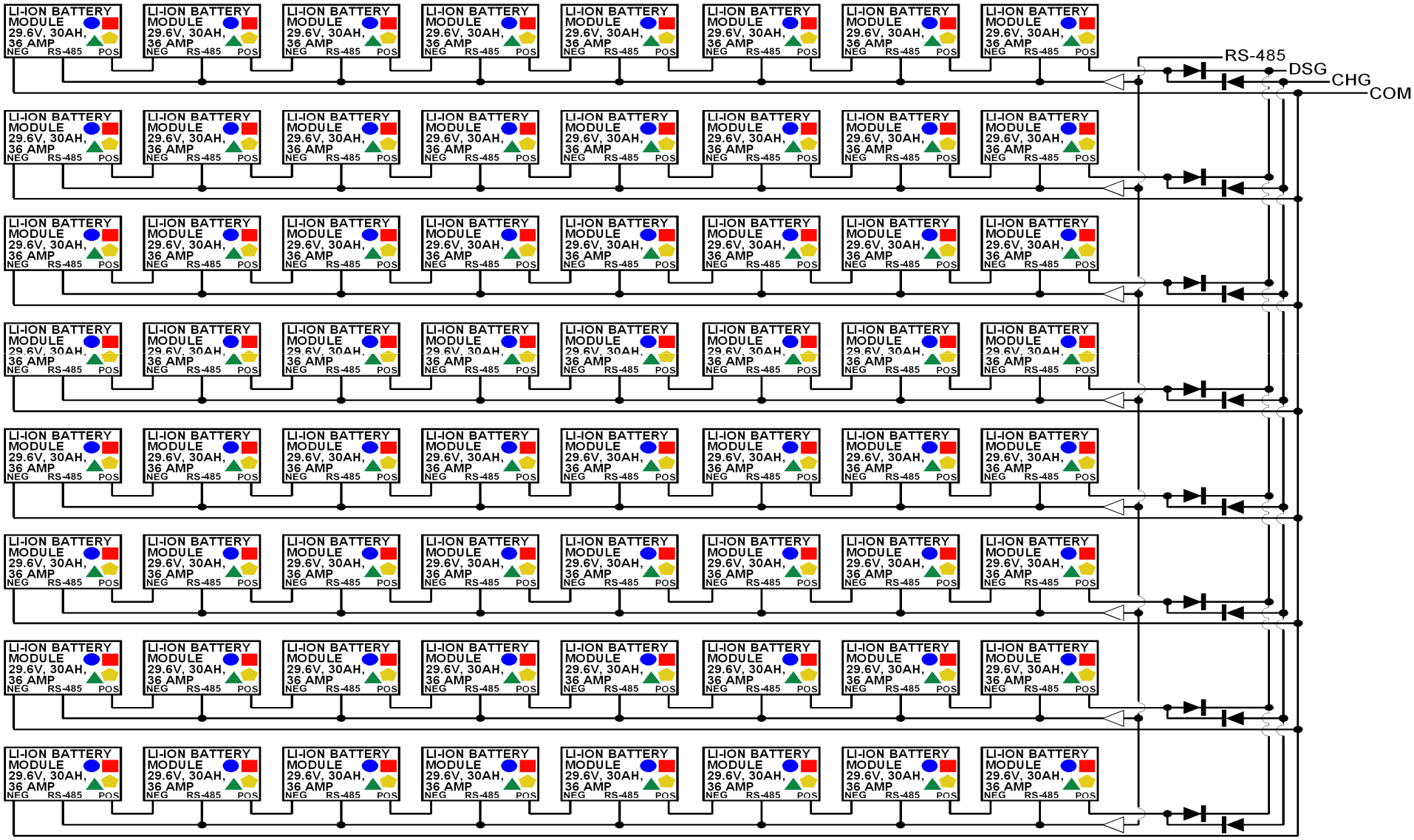

SENSE VOLTAGE & TEMP; CELL BALANCE

ACQUIRE VOLTAGE & TEMP; MOD BAL; CUR. SENSE; GAS GAUGE

MODULE BYPASS; CONFIGURATION CONTROL

CHG & DSG DISCONNECT; CHG CTL; ACQUIRE STATUS; COM

I. Modular Architectures

C. Comparison of Architecture Characteristics

SYSTEM ARCHITEC-TURE	BATTERY SYSTEM DESIGN	BATTERY MODULE DESIGN	DATA SYNC REQ'D?	MODULE COMM CRITICAL?	INHERENTLY REDUNDANT	CHARGE CONTROL	BALANCE CONTROL	SAFETY DISCON-NECTS	CONFIG-URATION FLEXIBLE?	COM PORT	MODULE REPLACEMENT?	MODULE BYPASS?
CENTRAL BMS	COMPLEX	**SIMPLE**	YES, (NOISE SEN.)	YES	NO	CENTRAL OR EXTERNAL	CENTRAL OR EXTERNAL	CENTRAL	NO	**SINGLE** (CENTRAL-IZED)	NOT SUPPORTED	NOT SUPPORTED
DISTRIBUTED BMS	**SIMPLE**	COMPLEX	**NO**	**NO**	**YES** PHYSICAL & SAFETY REDUNDANCY	**IN EACH MODULE**	**IN EACH MODULE**	**IN EACH MODULE**	**YES**	MANY (IN EACH MODULE)	**SUPPORT-ED**	**SUPPORT-ED**

II. Distributed BMS Module Block Diagram

DISTRIBUTED 5 - 10 SERIES HOST BMS (8 AMP)

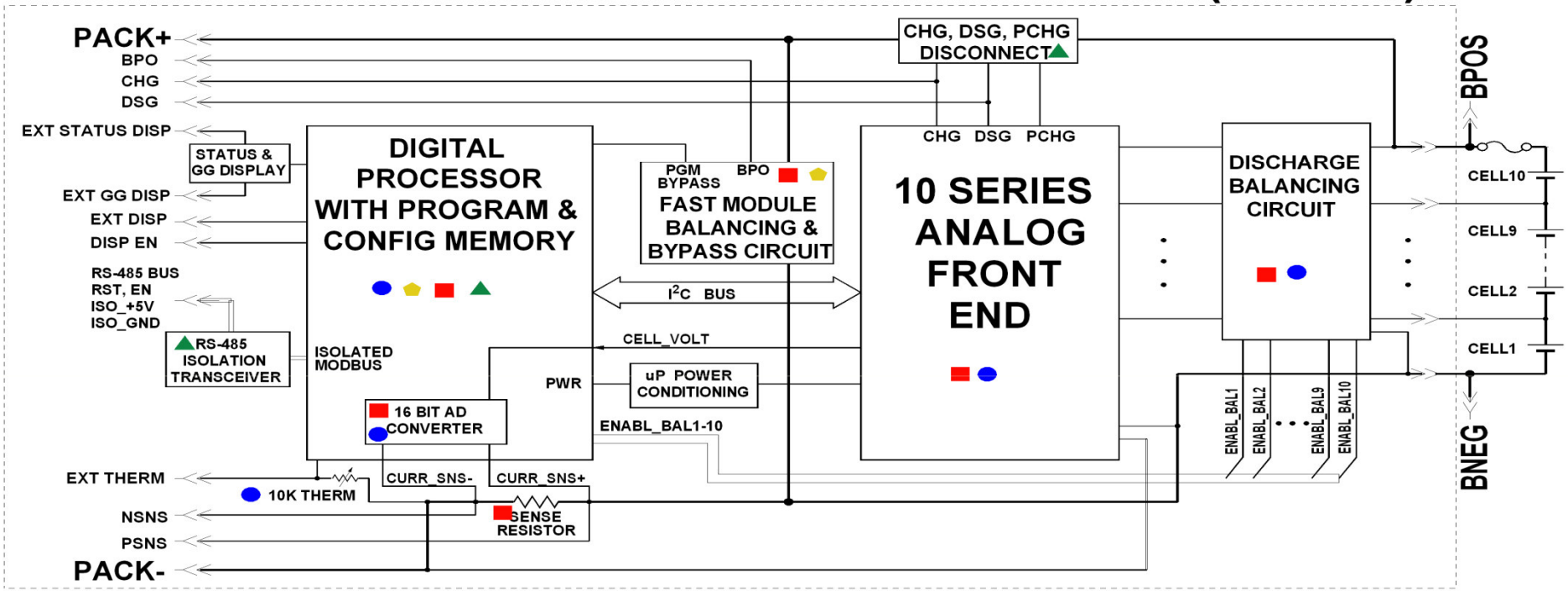

POWER BOOSTER BOARD (16 AMP)

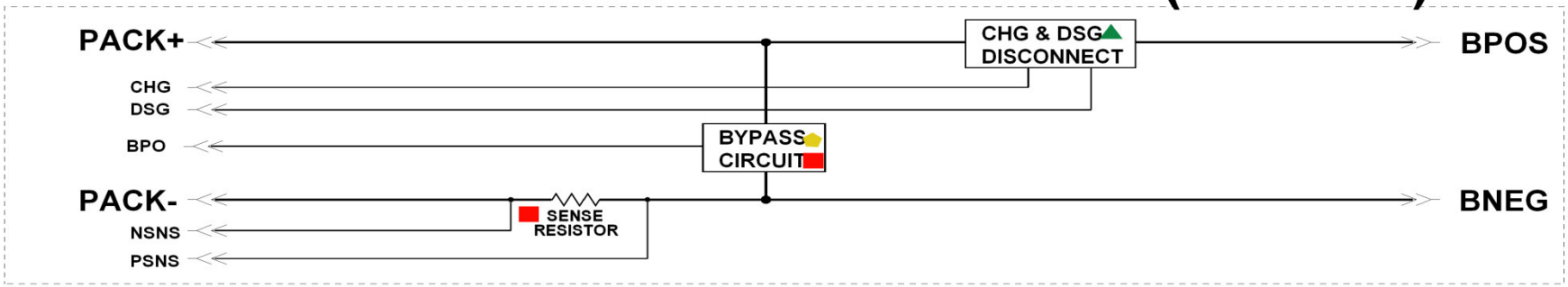

- SENSE VOLTAGE & TEMP; CELL BALANCE
- MODULE BYPASS; CONFIGURATION CONTROL
- ACQUIRE VOLTAGE & TEMP; MOD BAL; CUR. SENSE; GAS GAUGE
- CHG & DSG DISCONNECT; CHG CTL; ACQUIRE STATUS; COM

III. Distributed BMS Capabilities
A. STD Safety

1. Fast Charge Disable
   - CELL OVER VOLTAGE
   - CHARGE TEMP WINDOW
   - CELL UNDER VOLTAGE
   - TEMP ABOVE OR BELOW FAST CHARGE LIMITS
2. Discharge Disable
   - CELL UNDER VOLTAGE
   - OVER TEMPERATURE
   - SHORT CIRCUIT
   - OVER CURRENT
3. PreCharge (PCHG) Disable
   - CELL VOLTAGE ABOVE PCHG LIMIT
   - TEMP ABOVE OR BELOW PCHG LIMITS
4. Safety Limits Configurable via MODBUS

III. Distributed BMS Capabilities
B. Gas Gauge

1. Autonomous & Automatic (i.e., MODBUS not req'd)
2. Relative Capacity (in % w/~1% accuracy)
   - CALIBRATION BASED ON VOLTAGE VS CAPACITY
   - COULOMB COUNTING BETWEEN AUTO CALIBRATION
3. Absolute Capacity (in Ah or Wh w/~3% accuracy)
   - CALIBRATION BASED ON RELATIVE CAPACITY & COULOMB COUNTING
   - COULOMB COUNTING BETWEEN AUTO CALIBRATION
4. State-Of-Health
   - BASED ON ABSOLUTE CAPACITY VS DESIGN CAPACITY
5. Cell Characteristics in Configuration Memory
   - MULTIPLE CHEMISTRIES SUPPORTED
   - GAS GAUGE CALIBRATION THRESHOLDS ARE MODIFIED DEPENDING ON CELL CHARACTERISTICS
6. Cal Threshold Modification & Manual Cal possible via MODBUS

III. Distributed BMS Capabilities
C. Charge Control

1. Autonomous & Automatic (i.e., MODBUS not req'd)
   - **REQ'D FOR FINE INTER-MODULE BALANCING**
   - **UTILIZES CELL CHARACTERISTICES IN GAS GAUGE**
2. Pulse Charging
   - **TO ANY RELATIVE CHARGE LEVEL**
   - **~1% RELATIVE CHARGE LEVEL ACCURACY**
   - **CURRENT LIMITED CHARGE SOURCE W/VOLTAGE FOLD-BACK REQ'D (SOLAR PANEL, PWR SUPPLY, ETC.)**
   - **CHG CURRENT PULSING HAPPENS ONLY AT EOC**
   - **MOST FLEXIBLE MEANS OF CHARGE CONTROL**
3. Traditional Li-Ion Charging
   - **TO ANY RELATIVE CHARGE LEVEL**
   - **~1% VOLTAGE ACCURACY REQ'D FROM CHARGE SOURCE**
   - **USED TO AVOID PULSE CHARGING NOISE AT EOC**
4. Relative Charge Level Configurable Via MODBUS

III. Distributed BMS Capabilities
D. Intra-Module (cell) Balancing

1. Autonomous & Automatic (i.e., MODBUS not req'd)
2. Continuous Cell Balancing
   - **CHARGE**
   - **DISCHARGE**
   - **QUIESCENT OR STORAGE**
   - **SELECTABLE -> ANY OR ALL OF ABOVE**
3. Configurable
   - **PREVENTS MODULE CAPACITY REDUCTION DUE TO BALANCING**
   - **PREVENTS CELL DISCHARGE BELOW A SET CAPACITY**
   - **PREVENTS BALANCING OUTSIDE SET CURRENT LIMITS**
   - **PREVENTS BALANCING OUTSIDE SET TEMP LIMITS**
4. Differential Cell Discharge Via MODBUS
   - **EXTERNAL BALANCING PROVISION**
   - **EXTERNAL TESTING PROVISION**

III. Distributed BMS Capabilities
E. Inter-Module (module) Balancing (2 Versions*)

1. Autonomous & Automatic (i.e., MODBUS not req'd)
2. Version 1 - Fine Module Balancing at End Of Charge (EOC)
   - **PULSE CHARGE MINI-CYCLES (~0.5% CHG/DSG)**
   - **ZENER DIODE BALANCING**
   - **~1% MODULE BALANCING ACCURACY**
3. Version 2 - Ultra High Speed Module Balancing at EOC
   - **>100 TIMES FASTER (@ FCHG RATE)**
   - **USED TO BALANCE REPLACED MODULES**
   - **~3% OR BETTER MODULE BALANCING ACCURACY**
   - **USES BYPASS CIRCUIT W/CONFIGURABLE ACTIVATION THRESHOLDS**
4. Both Versions Manually Possible Via MODBUS
   - **MANUAL MODULE BALANCING IS POSSIBLE IN CHARGE, DISCHARGE, OR QUIESCENT MODES**
5. Thresholds Configurable Via MODBUS

*See www.swe.com for details

III. Distributed BMS Capabilities
F. Cell Short Detection (2 Methods)

1. Autonomous & Automatic (i.e., MODBUS not req'd)
2. Algorithms Use Real Time Data From Intra-Module Balancing
3. Method #1 For Multiple Minor Shorts Over a Long Time Period
4. Method #2 For an Intensive Short Within A Time Window
   - **TIME WINDOW IS CONFIGURABLE**
   - **INTENSITY THRESHOLD IS CONFIGURABLE**
   - **FAULT CAN RESULT IN FORCED MODULE DISCHARGE AND/OR CHARGE DISCONNECT (CONFIGURABLE)**
5. Fault Thresholds Configurable Via MODBUS
6. Further Research Needed to Fully Validate Methods
   - **VARYING INTENSITY OF FORCED INTERNAL CELL SHORTS**
   - **DETERMINING INTERNAL CELL SHORT DANGER THRESHOLD**

III. Distributed BMS Capabilities
G. Module Bypass

1. Autonomous & Automatic (i.e., MODBUS not req'd)
2. Used for Ultra High Speed Module Balancing (see III.E.)
3. Features
   - **PREVENTS HIGH VOLTAGE DAMAGE TO BMS DURING CHARGE**
   - **PREVENTS CELL AND MODULE REVERSE VOLTAGE DAMAGE**
   - **HIGH SURGE CAPABILITY**
   - **CURRENT CAPABILITY EQUAL TO MODULE DISCHARGE RATE**
   - **DSG FETS FORCED OFF PRIOR TO BYPASS**
   - **SAFETY FUSE USED SHOULD DSG FETS FAIL SHORTED**
4. Manual Module Bypass is Possible Via MODBUS
   - **ALLOWS CONTINUED OPERATION AT REDUCED VOLTAGE**
   - **USEFUL FOR VOLTAGE CONFIGURATION CONTROL?**

III. Distributed BMS Capabilities
H. Status & Control Com. Port

1. RS-485 MODBUS
   - **MODULES UNIQUELY ADDRESSABLE**
2. External Com Port Power (5V & Gnd)
   - **CAN BE POWERED OFF TO SAVE POWER**
3. Com Port Isolated from Module Voltages
4. Module Disable & Reset Pins are in Connector
   - **NO NEED FOR MODBUS OPERABILITY**
5. Com Port is Not Required for Battery Operability
   - **ALL MODULE BMS FUNCTIONS ARE AUTOMATIC & AUTONOMOUS**
   - **BATTERY & BATTERY SAFETY ARE MAINTAINED W/O COM PORT**
6. Com Port Capabilities
   - **MODULE & CELL CONFIGURATION (DESIGN) CONTROL**
   - **FAULT STATUS REPORTING**
   - **OPERATION STATUS REPORTING (VOLTAGES, CURRENT , TEMPERATURE, GAS GAUGE, ETC.)**
   - **BOOT LOAD NEW SW VIA MODBUS**

IV. Questions?

Contact Information:

David A. White

Southwest Electronic Energy Group

12701 Royal Drive

Stafford, Texas

281-240-4000

dwhite@swe.com

Web Site: www.swe.com