Pouch Corrosion: Investigation Status

by
John Weintritt, Pranav Patel and Eric Darcy/NASA-JSC
Presented at the
2007 NASA Aerospace Battery Workshop
Huntsville, AL

Outline

- Background
- Pouch Corrosion Problem
  - The final nail in the Electrovaya Spacesuit Battery
  - The investigation status & results to date
- Remaining challenges

Background

- Spacesuit battery requirements
  - 26.6Ah to 16V
  - 5 year service life
  - With 600 days spent fully charged (4.1V/cell)
- In Oct 2003, award FFP contract to Electrovaya for development, qualification, and production of 20 flight batteries and 6 chargers
- Electrovaya Design
  - Five Li-ion pouch cells in parallel (7.4Ah nominal) per module
  - Five 38 Ah cell modules in series
- In Feb 06, one unit suffered an internal short in a cell module
  - Native contamination
- In Sep 06, we decided to put remaining 19 units in the fleet through a delta acceptance test

Cell Module Design

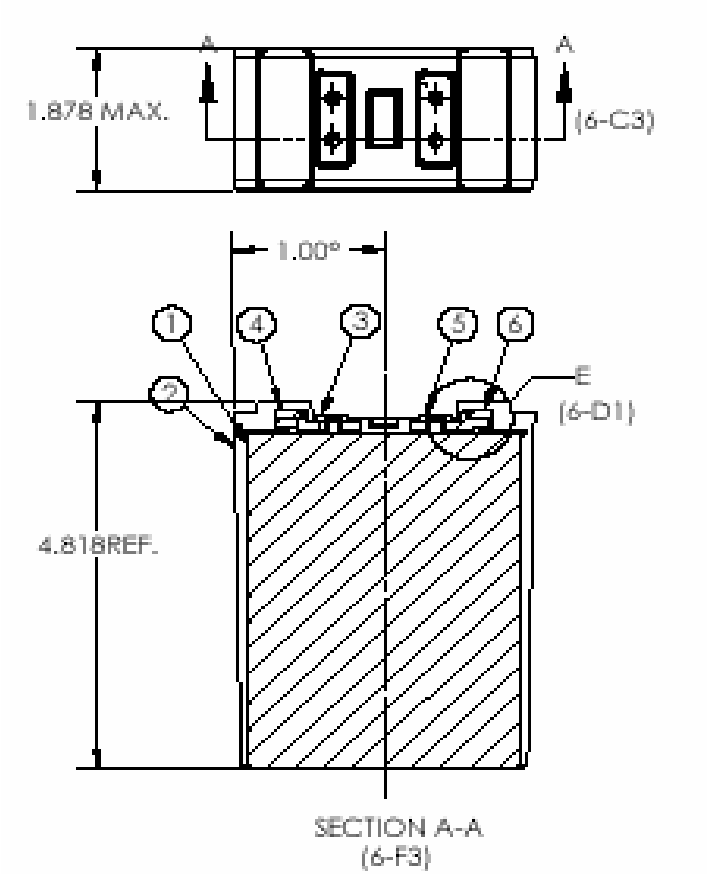

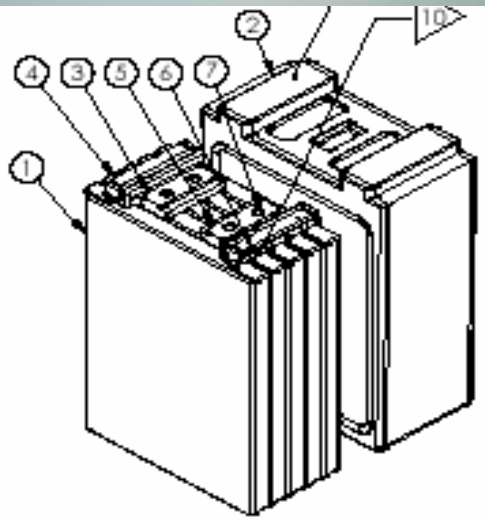

Outer bag, omitted for clarity, encloses the 5 cells

Sacrificial solvent (EC, DMC) stored in plastic bag next to wide face of 5th cell

(EC acts as desiccant while DMC's high vapor pressure lowers the diffusion gradient)

Mass ~ 160 g

NASA LIB Cell

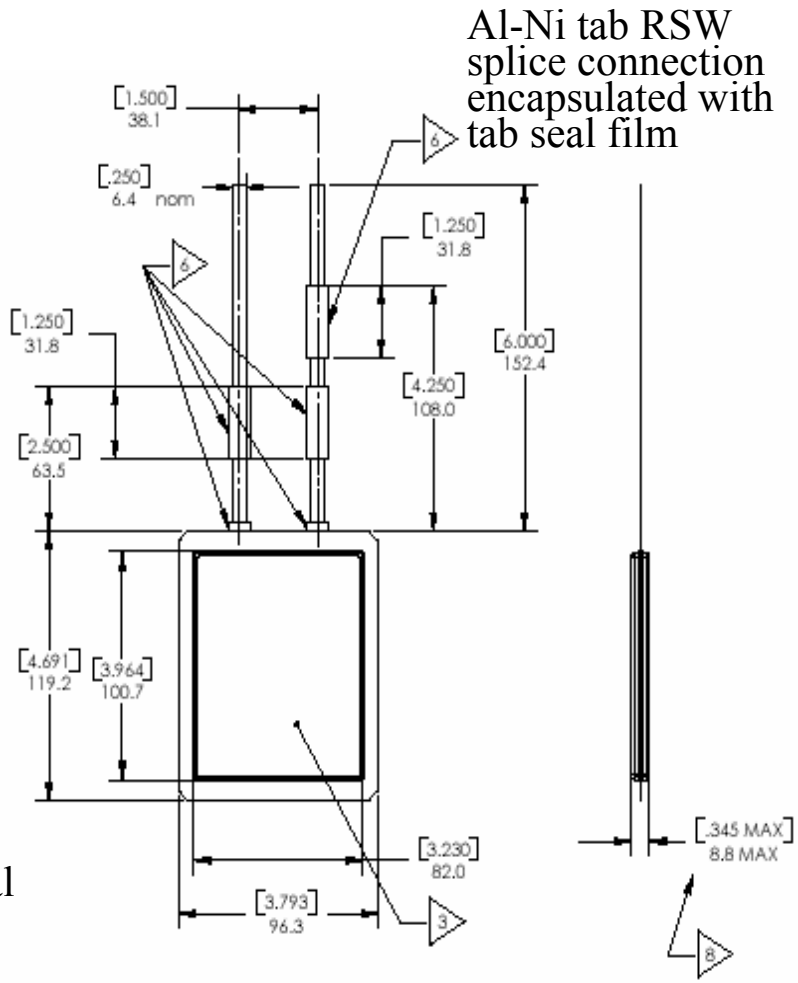

Utilizing pouch cell technology

- Lithiated carbon anode
- Lithium cobalt oxide cathode
- Liquid electrolyte imbedded in polymer in separator and active material
- Plasticized aluminum pouch enclosure

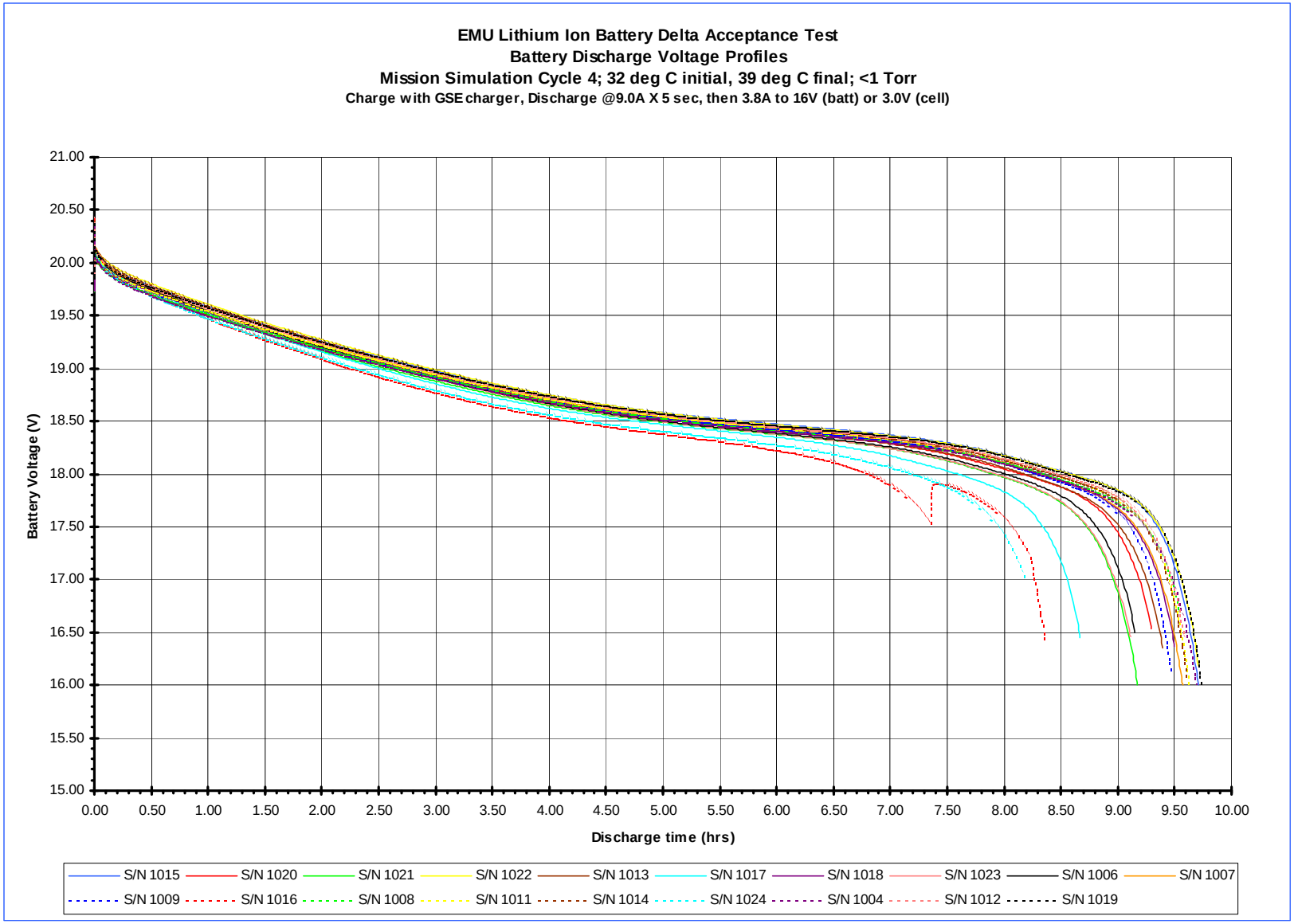
EMU Lithium Ion Battery Delta Acceptance Test
Battery Discharge Voltage Profiles
Mission Simulation Cycle 4; 32 deg C initial, 39 deg C final; <1 Torr
Charge with GSE charger, Discharge @9.0A X 5 sec, then 3.8A to 16V (batt) or 3.0V (cell)
Battery Voltage (V)
21.00
20.50
20.00
19.50
19.00
18.50
18.00
17.50
17.00
16.50
16.00
15.50
15.00
0.00
0.50
1.00
1.50
2.00
2.50
3.00
3.50
4.00
4.50
5.00
5.50
6.00
6.50
7.00
7.50
8.00
8.50
9.00
9.50
10.00
Discharge time (hrs)
S/N 1015
S/N 1020
S/N 1021
S/N 1022
S/N 1013
S/N 1017
S/N 1018
S/N 1023
S/N 1006
S/N 1007
S/N 1009
S/N 1016
S/N 1008
S/N 1011
S/N 1014
S/N 1024
S/N 1004
S/N 1012
S/N 1019

SN 1016 DPA photos

Nominal mass

Nominal outer pouch

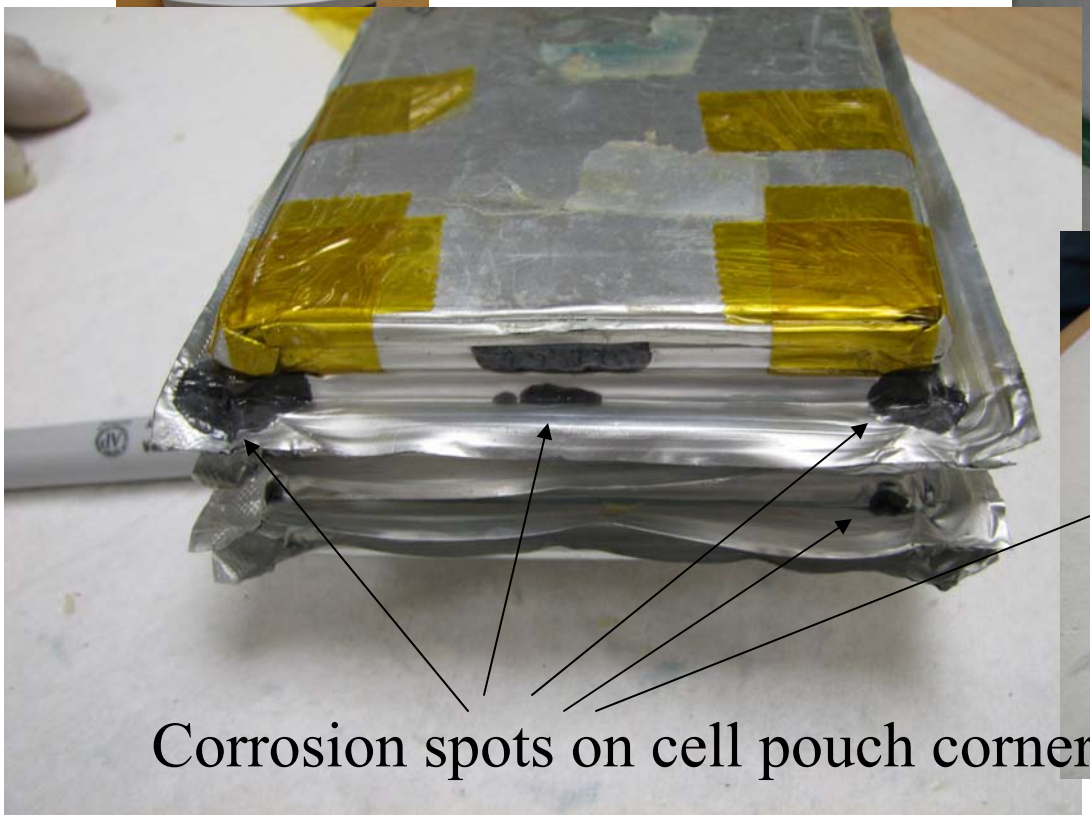

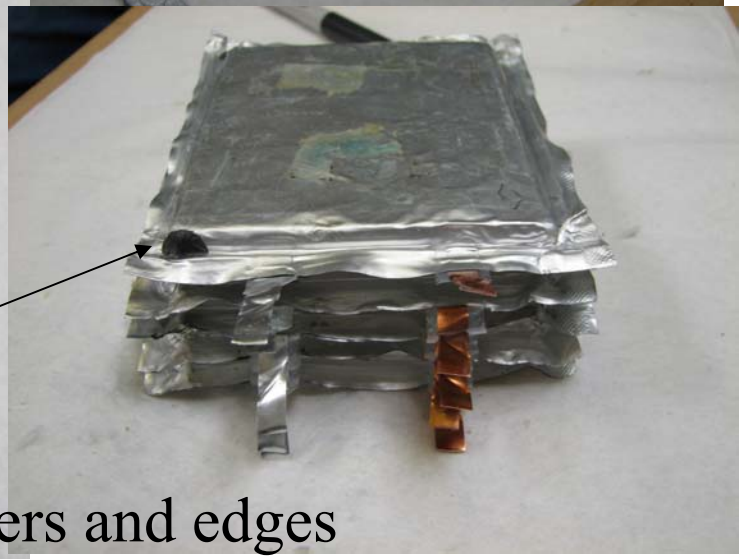

Corrosion spots on cell pouch corners and edges

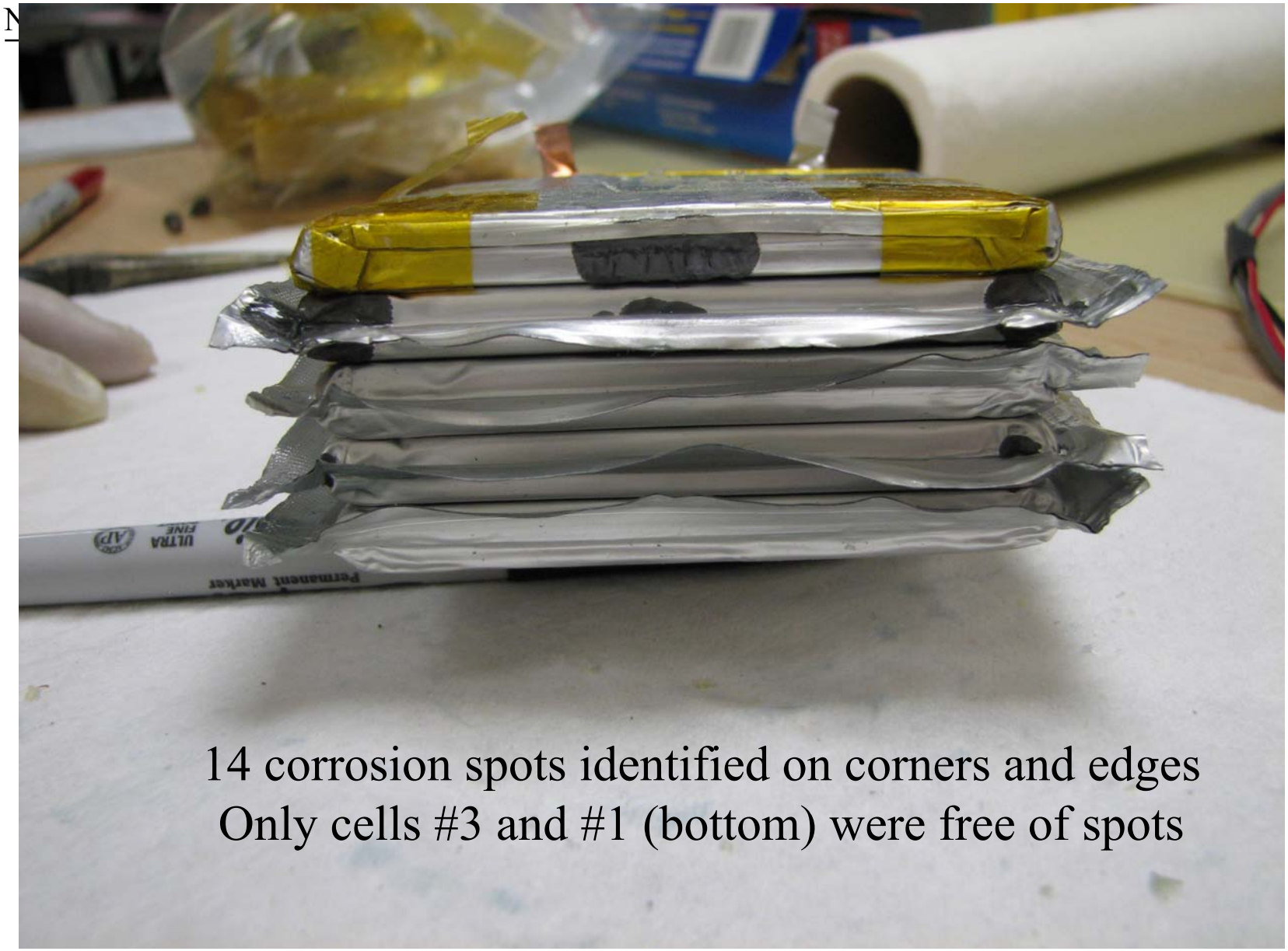
14 corrosion spots identified on corners and edges
Only cells #3 and #1 (bottom) were free of spots

Similar Corrosion: Flight-like Life Test Cells

- Examined cells delivered to SRI in April 2005 for life testing
- Engineering cells with same pouch material and clam shell sealing technique as flight cells
- Noticed 12 of 30 cells with tiny corrosion sites on their corners or edges
  - Traces of electrolyte residue were present
- Problem is obviously very pervasive
- **Certification of Electrovaya cell module was abandoned in Jan 07**

Pouch Corrosion Investigation Plan

- Secured funding to research this phenomena
- Plan
  - Determine the pervasiveness of the corrosion by inspection and DPA of our lots of cells and cell modules
  - Establish commonalities between corrosion sites, test hypothesis on inner layer
    - Locations on the pouches – Why are only corners affected ?
    - Cell design features and manufacturing processes used – Is material stressed by butter cupping?
    - Does pouch formation stretch elasticity of aluminum and polyethylene but breaks brittle HF protective layer adjacent to aluminum ?
    - Storage conditions and cell histories
  - Measure pouch isolation resistances of affected cells and compare them to healthy cells
  - Examine samples of the pouch laminate in folded conditions vs unfolded
  - Attempt to replicate and accelerate the failure in laboratory conditions
  - Establish figure-of-merit P/F criteria for prevention of corrosion
    - Leak test
    - Isolation resistance test
  - Compare various manufacturers designs

DNP Packaging Films for Li –Polymer Battery

2002/12/23
DNP

Type	Pouch		Butter Cup	
Title	E20X	D-EL20E	D-EL40EM	D-EL40H
Thickness	105 μm	90 μm	110 μm	113 μm
Composition	PET 12 DL ALM 20 HF Protection Layer DL PET 12 EMAA 55 EMAA has sealing capability to metal-tabs	PET 12 DL ALM 20 HF Protection Layer EL 15 PE 40 PEa(tab-film) Precondition	ONy 25 DL ALM 40 HF Protection Layer EL 12 PE 30 PEa(tab-film) Precondition	ONy 25 DL ALM 40 HF Protection Layer EL 15 PE 30 PEa(tab-film) Precondition

<Abbreviation>				
	PET: Oriented Polyethylene Telephthalate	ALM: Aluminum	PE: Polyethylene	DL: Dry Lamination Layer
	Ony: Oriented Nylon	EMAA: Acid modified Polyethylene	PP: Polypropylene	EL: Extrusion Lamination Layer

Slide used with permission of cell and data provider 11/22/07.

Cross-cut of drawn cell pouch laminate D-EL40EM

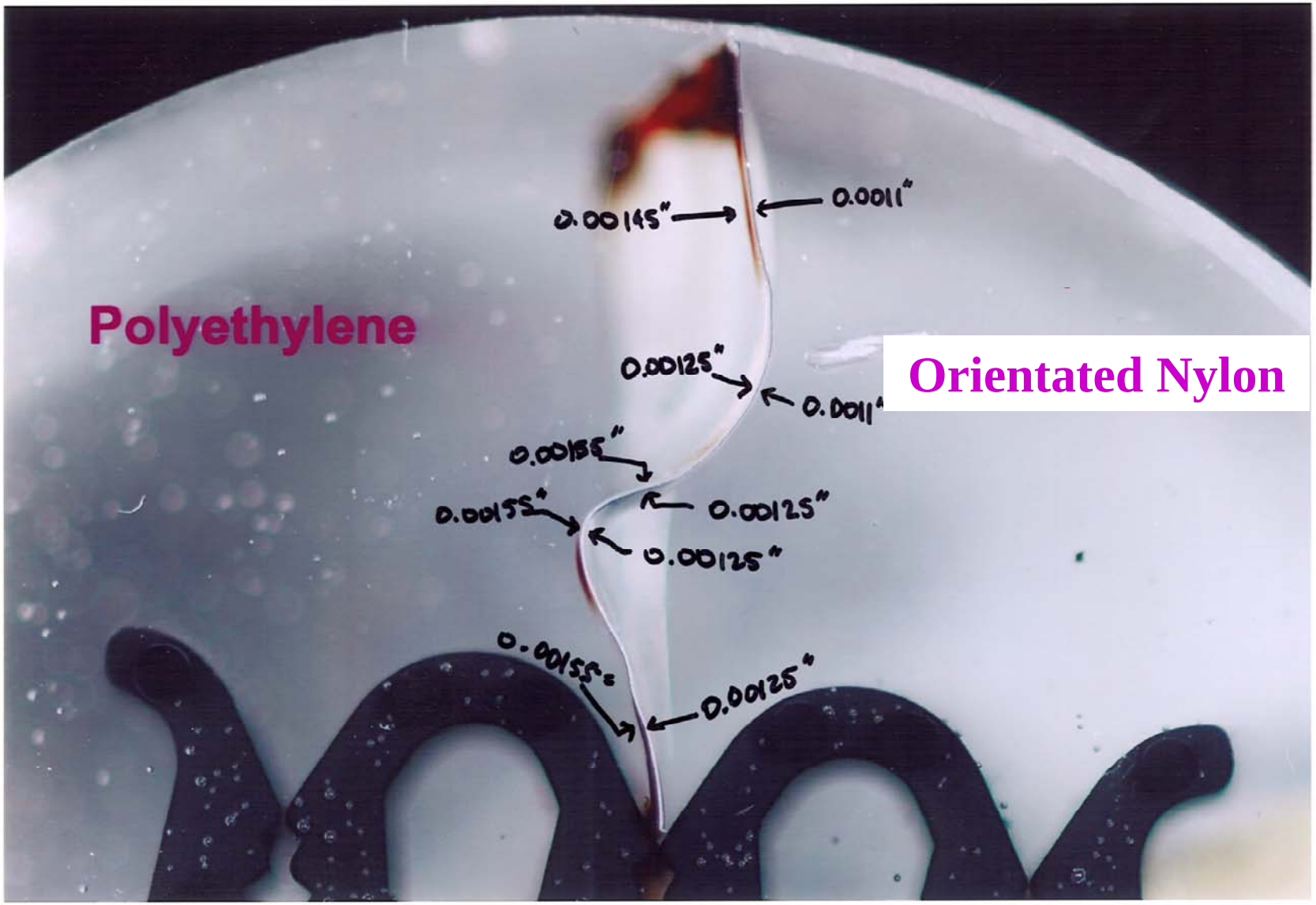

LG flat-01 showing melt extrusion

LG flat-03 showing corner thinning

1	6.27624	Thk
2	6.02832	Thk
3	5.89767	Thk
4	5.88796	Thk
5	6.27281	Thk
6	6.30124	Thk
7	6.48893	Thk
8	6.575	Thk
9	2.87674	Poly
10	2.86575	Poly
11	2.44872	Poly
12	2.41687	Poly
13	2.69258	Poly
14	3.07581	Poly
15	3.18561	Poly
16	3.42509	Poly
17	3.67713	Poly
18	0.93708	Nyl
19	1.97943	Al

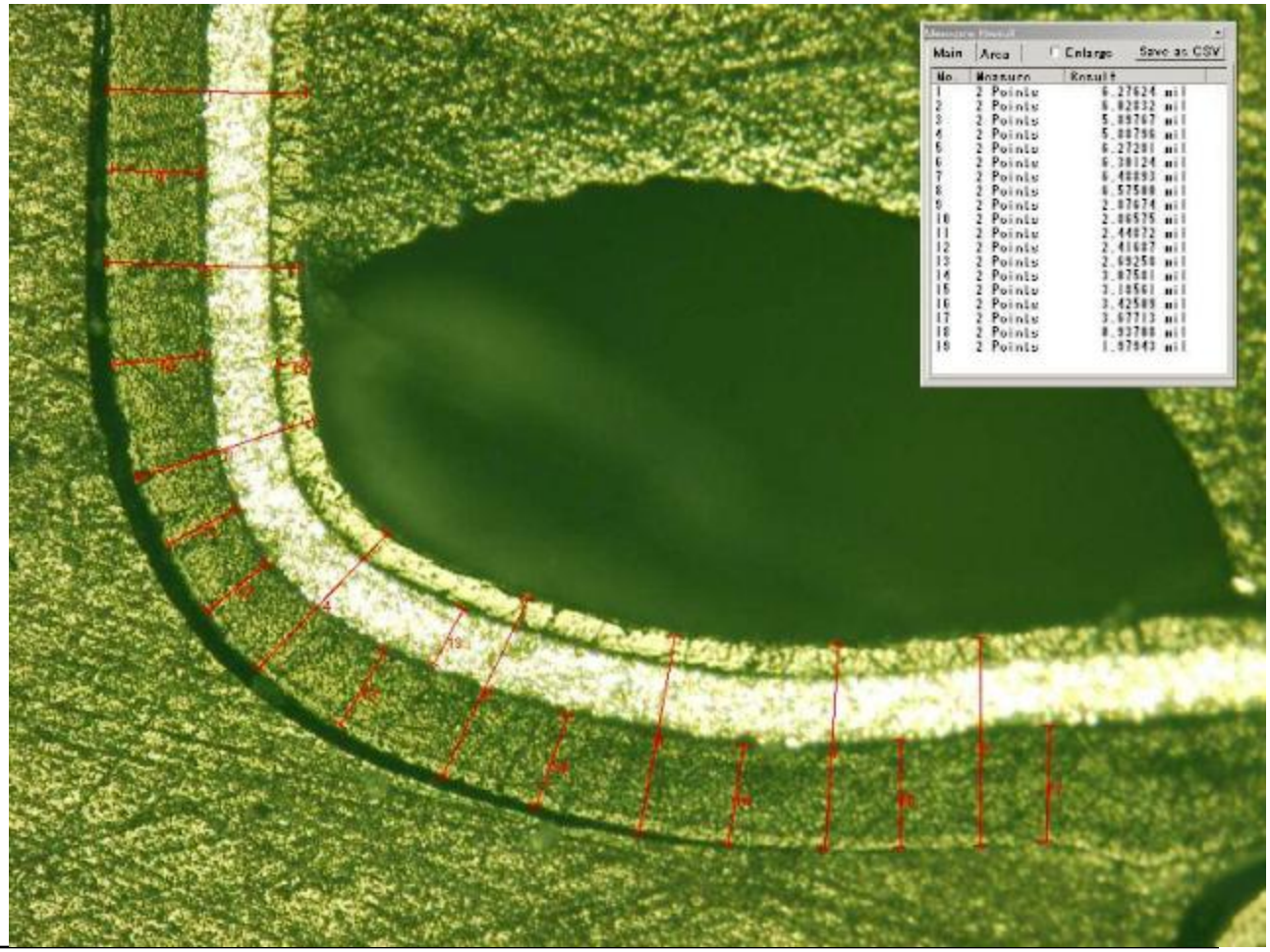

SKC flat-01 showing melt extrusion

SKC flat-03 showing corner thinning

3	2 Points	4.02570
4	2 Points	4.15000
5	2 Points	4.12197
6	2 Points	4.37186
7	2 Points	4.58762
8	2 Points	4.62507
9	2 Points	4.62020
10	2 Points	4.43354
11	2 Points	4.25573
12	2 Points	1.27009
13	2 Points	1.43200
14	2 Points	1.57678
15	2 Points	1.66208
16	2 Points	1.64412
17	2 Points	1.24122
18	2 Points	1.22500
19	2 Points	1.22500
20	2 Points	1.20000
21	2 Points	1.27525
22	2 Points	1.27500

Thk 3-11
Poly 12-22

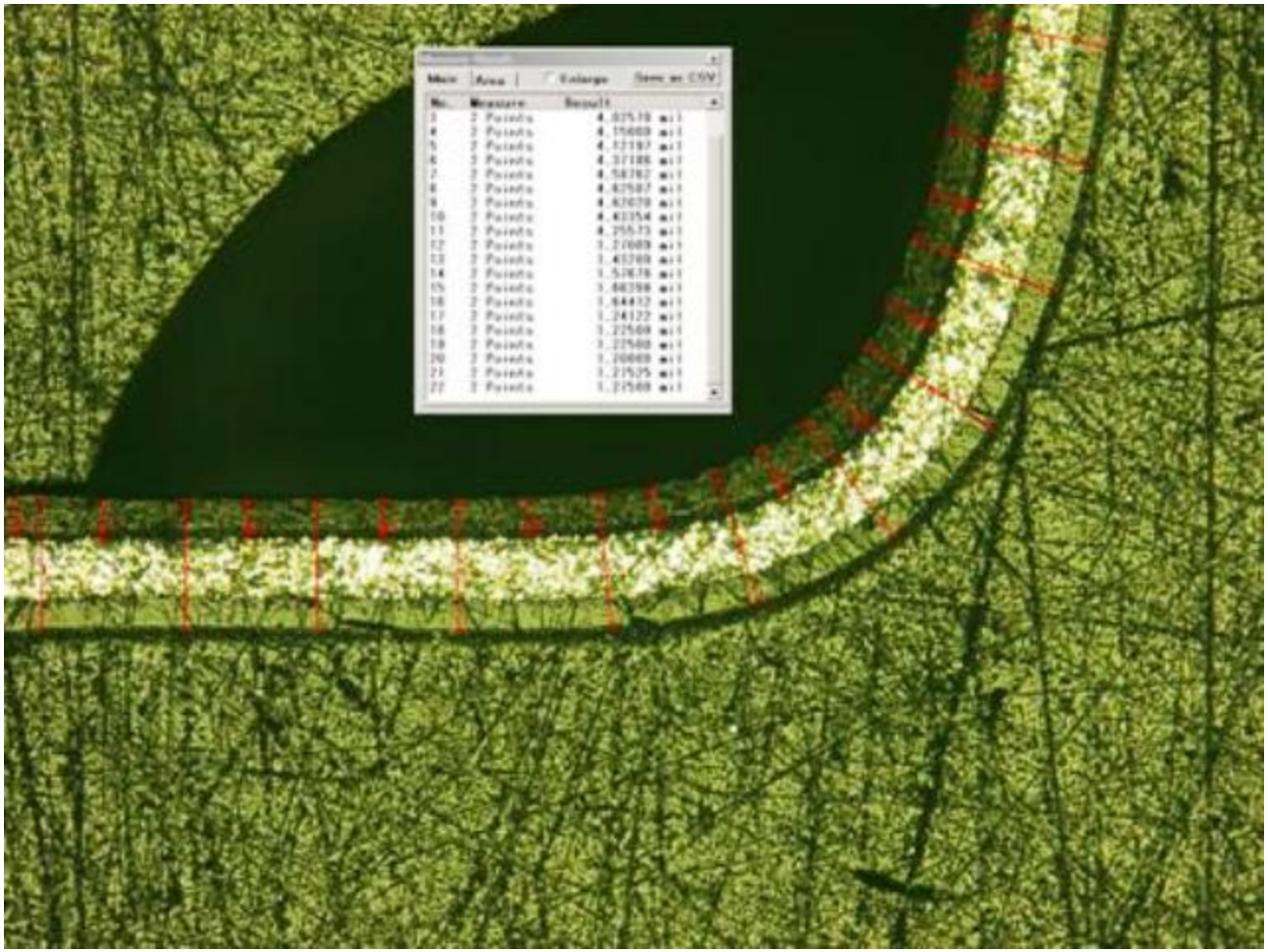

SKC corner-01

SKC corner-03 showing corner thinning

1	2 Points	4.14261
2	2 Points	4.18039
3	2 Points	4.02872
4	2 Points	4.06586
5	2 Points	3.98003
6	2 Points	4.42302
7	2 Points	4.61147
8	2 Points	4.92659
9	2 Points	1.35301
10	2 Points	1.34559
11	2 Points	1.24197
12	2 Points	1.38293
13	2 Points	1.47182
14	2 Points	1.48261
15	2 Points	1.62673
16	2 Points	1.74642
17	2 Points	1.74732
18	2 Points	1.69503
19	2 Points	1.66208
20	2 Points	1.60351
21	2 Points	1.90739
22	2 Points	1.92500

Thk 1-8
Poly 9-15
Alum 16-22

Electrovaya Pouch Shorted to (-) Test

Immediately after shorting

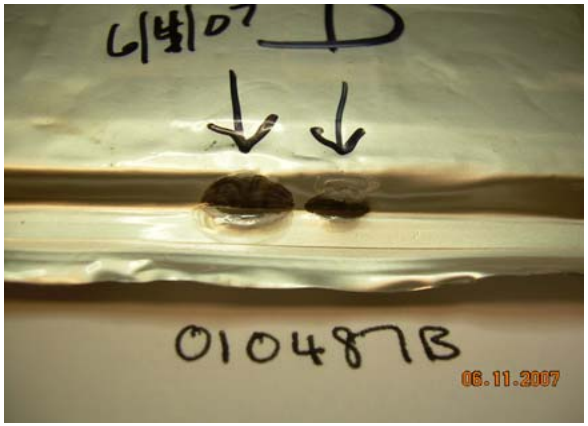

Pouch corrosion several days later

Measured cell OCV, pouch isolation resistance, along with daily visual inspections

Shorted Pouch to (-) Experiment

- Added 4 cell designs to test matrix
  - SKC – 3.1Ah
  - LG – 10 Ah
  - Saehan – 2.1 Ah
  - Kokam – 8 Ah
- Kokam and Saehan cells developed similar corrosion spots within a week
  - On edge and corner seal areas
- After > 90 days, no evidence of corrosion found on LG or SKC cells similarly tested
  - What is different about them?

Pouch Corrosion Findings (to date)

- Within 48 to72 hours after shorting pouch to Cu (-) tab, dark gray spots appeared on the Electrovaya cells, identical in appearance to that found in 18 month old flight EMU batteries
- All spots found on stretched (drawn) section of laminate, most on bottom corners of cell, but largest ones formed on edges
- Dark deposits found on internal side of pouch conductively bridging to Al layer of pouch laminate (causing reduction in isolation resistance)

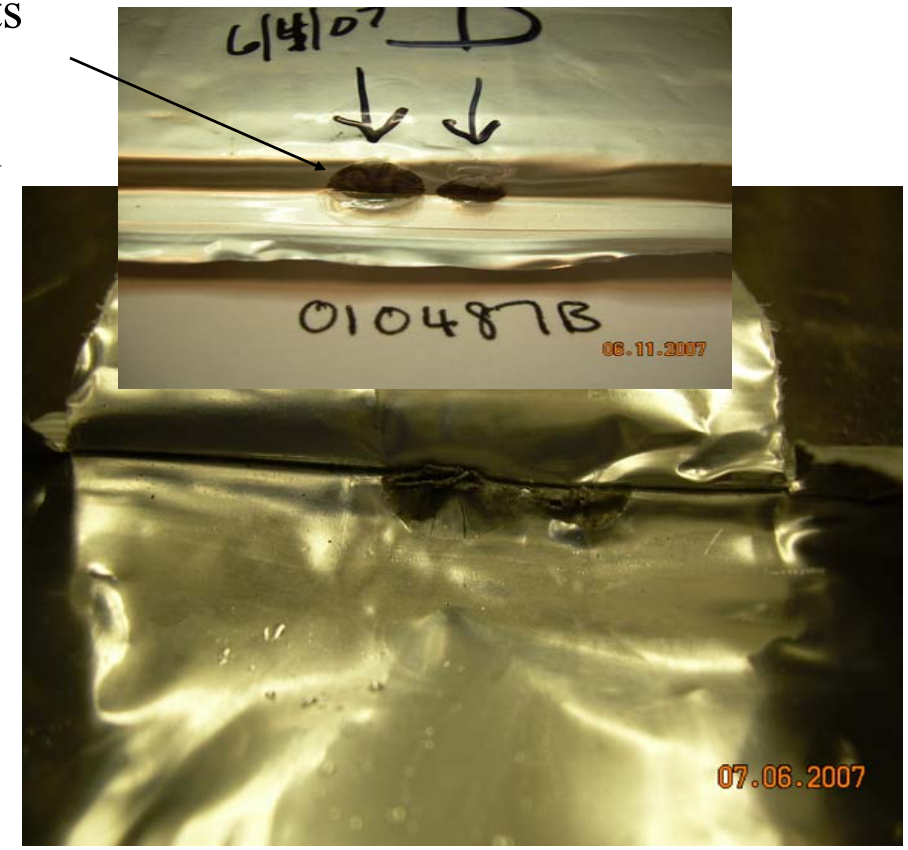

Resistance Measurements of all 18 cells

Cell assignment: 1-3 SKC, 4-9 Electrovaya, 10-12 Kokam, 13-15 Saehan, 16-18 LG

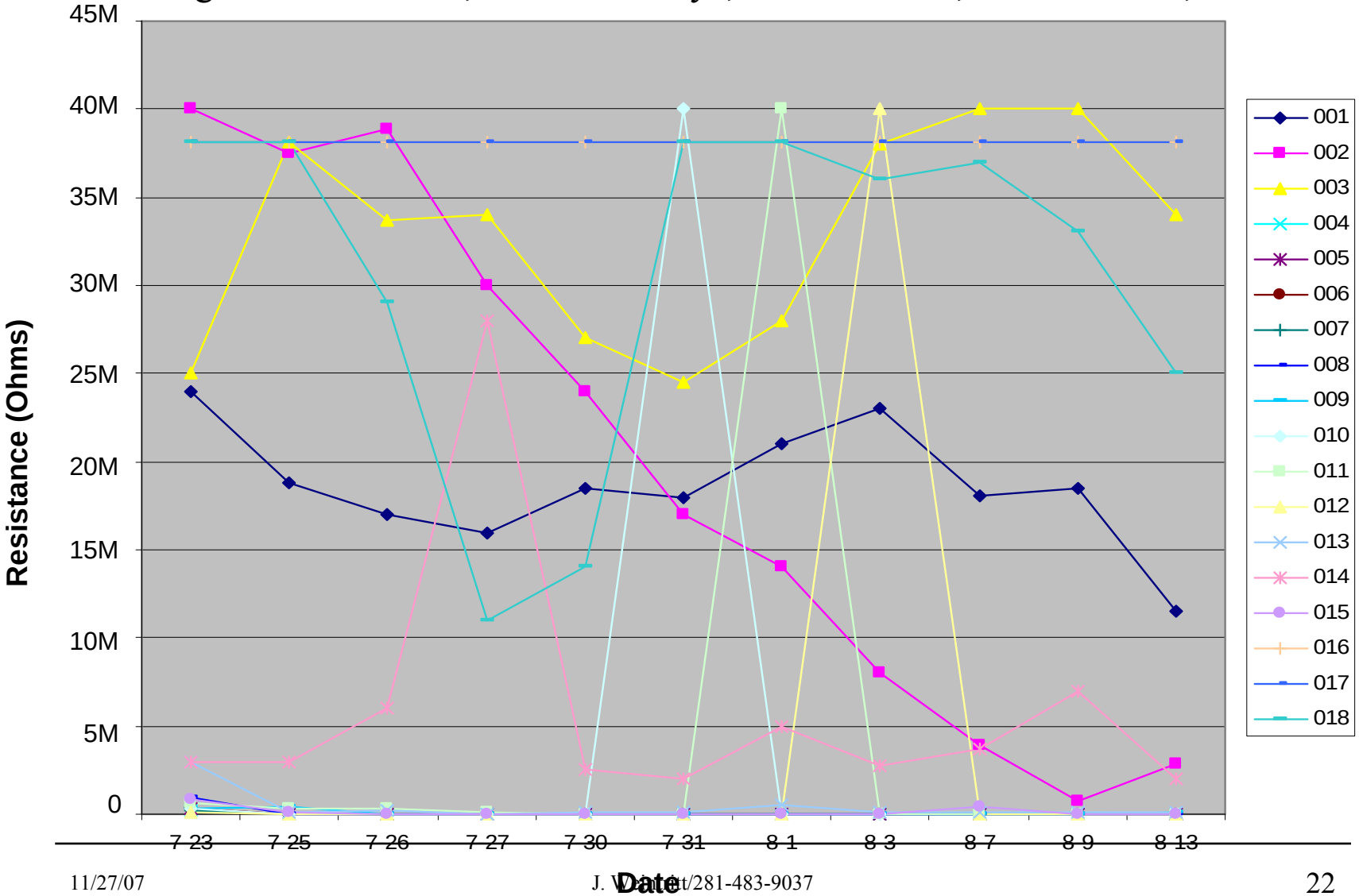

20kΩ Zoom - by cell number - black spots first appear in relation to resistance values
Cell assignment: 1-3 SKC, 4-9 Electrovaya, 10-12 Kokam, 13-15 Saehan, 16-18 LG

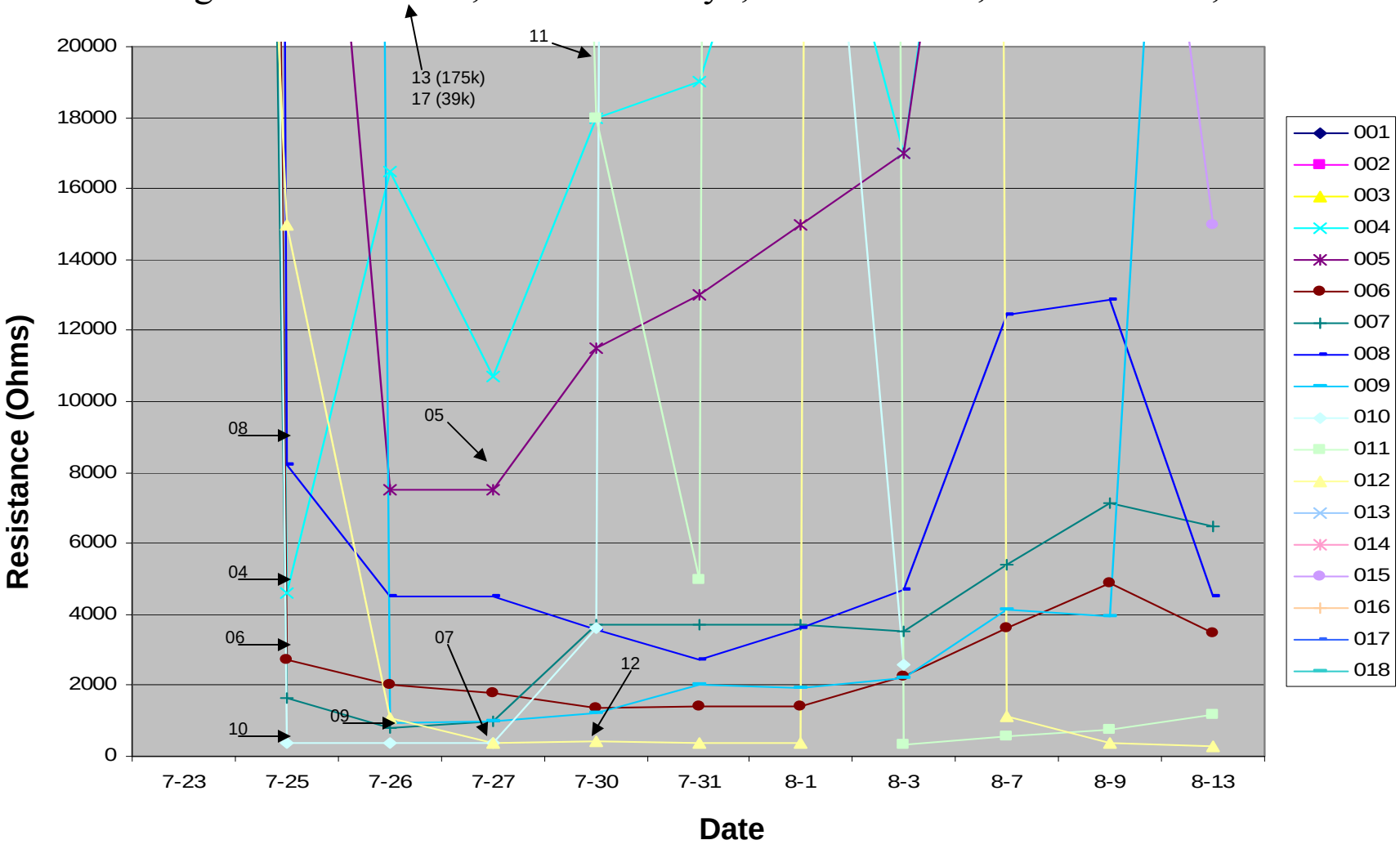

20kΩ Zoom resistance value observations - continued

- Cell assignment: 1-3 SKC, 4-9 Electrovaya, 10-12 Kokam, 13-15 Saehan, 16-18 LG
- Tab to tab resistance, 25 Meg Ohms average per cell – all types
- Cells 10, 11, 12 – All Kokams had a resistance spike late in life
- Majority of black spots formed when resistance drops below 10,000 ohms.
- Number 5 cell dipped to below 10K ohms for a few days, formed black spots during this time, then rose again
- Saehan was exception with spots forming at 175K ohms and 39K ohms
- Little change in all cell OCV's
- We think cell gas (puffing) caused pouch to mechanically compress plate pack edges, causing intermittent resistance measurement breakdown.
- Packs appeared to vent after black spot deteriorated cell gas barrier integrity
- Steady drops in any one pouch isolation resistance led us to accurately predict initial black spot occurrence within 12 or so hours in that cell

Current work on SEM/EDS Analysis of Spots

- Energy Dispersion Spectroscopy (EDS) analysis indicate a strong phosphorus, aluminum concentrations in the corrosion products
- P comes only from the electrolyte salt ($LiPF_6$)

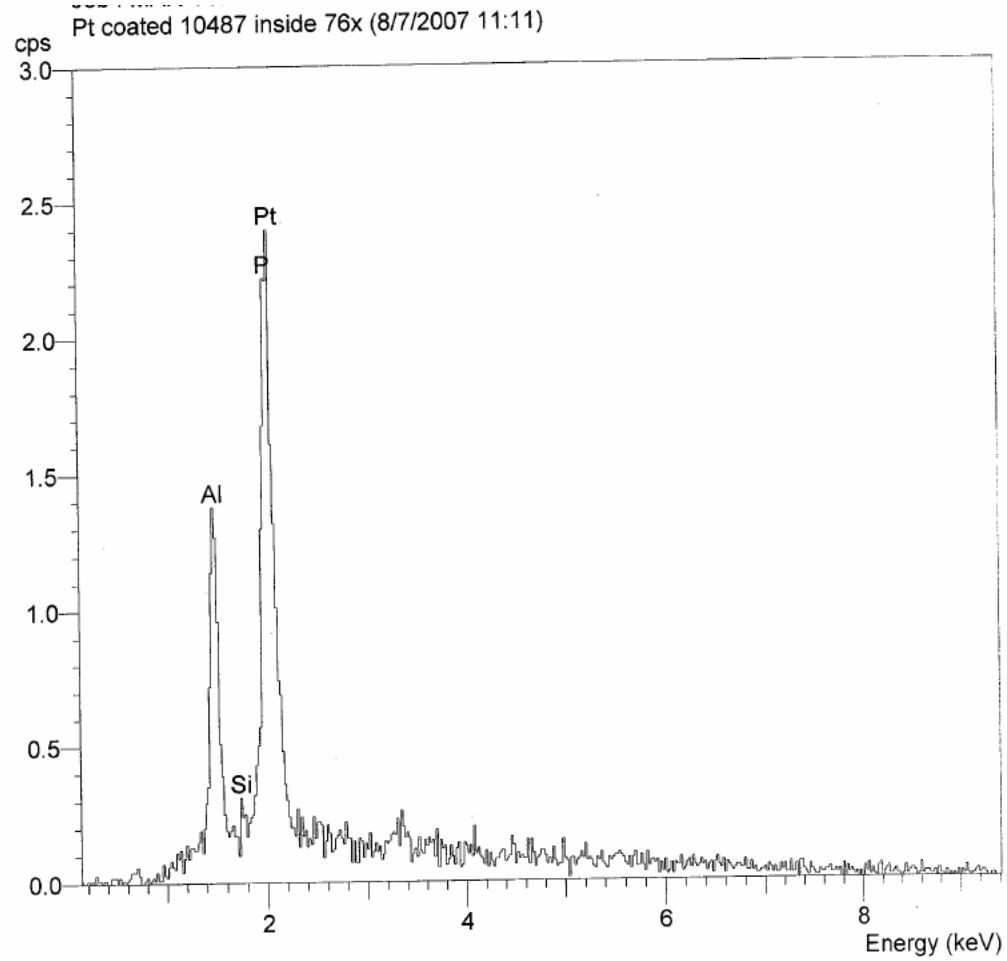

Findings (cont.)

- DPA of pouch shorted cells with corrosion spots reveal no anomalies with internal electrode stack or with isolation resistance of (-) tab seal from pouch
- Fundamental tests have been on-going to help determine most important factor leading to corrosion
  - Stretched laminate weakening
  - Aggressive heat sealing induced defects
  - Defects in laminate insulation
  - Excessive folding induced defects

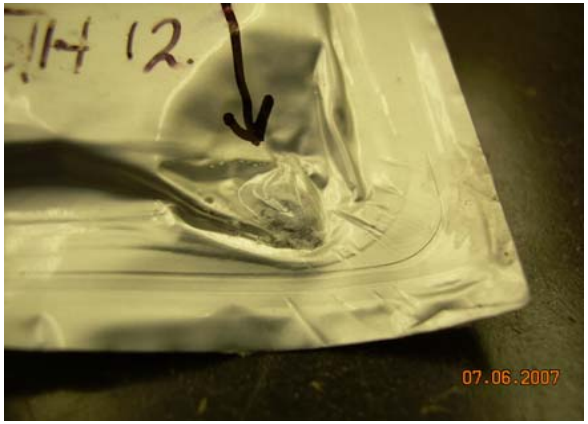

Li-Al alloy/compound Formation Theory

- Proposed by SKC and Kokam
- Based on hypothesized galvanic reaction of Li ions with the Al layer in the laminate
  - $C/Li \Rightarrow Li^{+} + e^{-}$ 0.10 V vs Li
  - $Al \Rightarrow Al^{3+} + 3e^{-}$ 1.36 V vs Li
- Occurs wherever weaknesses in the laminate insulation (polyethylene) layer and electrolyte bridges exist, corrosion spots may occur
- Density decrease of Li-Al compound/alloy vs Al alloy can cause stress cracks that lead to electrolyte leakage

Testing Li-Al Alloy Formation Theory

- Argon Glove Box Procedure
  - Carefully bend various laminate pouch assemblies into bowl shapes
  - Connected top end of lithium strip to exposed Al layer of laminate
  - Flooded bottom of bowl with electrolyte (1M $LiPF_6$ in EC/DMC) to immerse bottom end of lithium strip, being very careful to not wet the edges of the laminate, where Al is exposed
- Results
  - **No** pouch corrosion after 1 month with all types of laminate
    - Virgin
    - Folded
    - Folded & heat sealed
    - Formed, folded, & heat sealed
- Conclusion: **Li-Al alloying is not the corrosion mechanism…need more than Li^+, pouch defects, and electrolyte to trigger pouch corrosion**

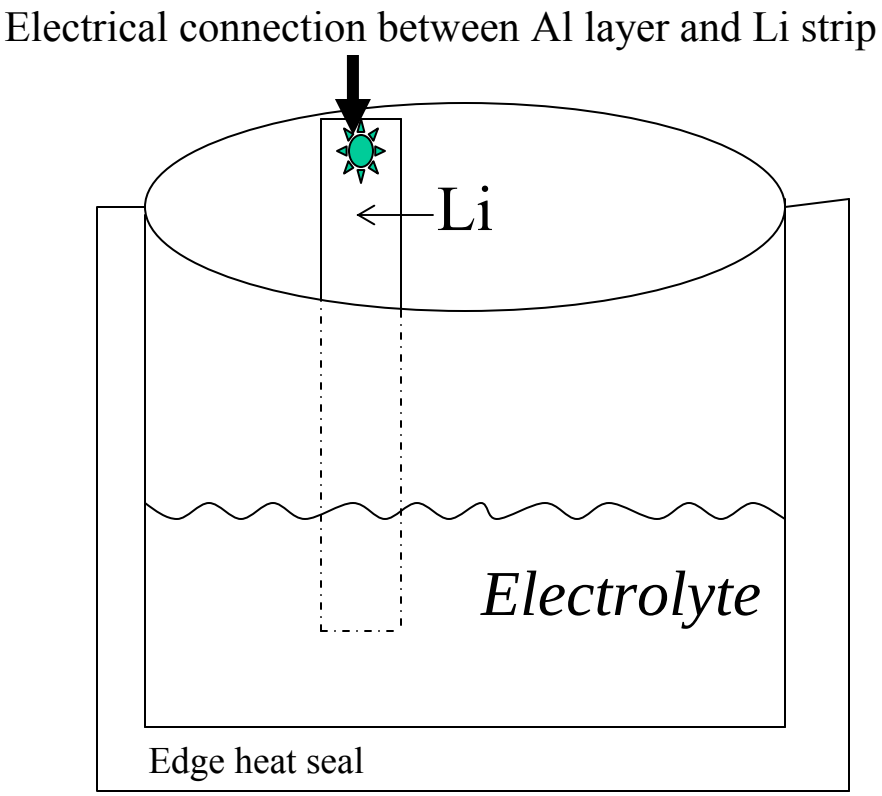

Boat of laminate pouch

Most Recent Work

- Current experiments added the following components to the laminate "boats"
  - Copper
  - Separator
  - Anode assembly
  - Cathode assembly
  - Unformed anode/separator/cathode assembly
- This should have identified what components were necessary to trigger corrosion – no results
- DPA of the SKC and LG cells was done to determine what materials and features made these designs less susceptible to corrosion – no conclusions – see photos

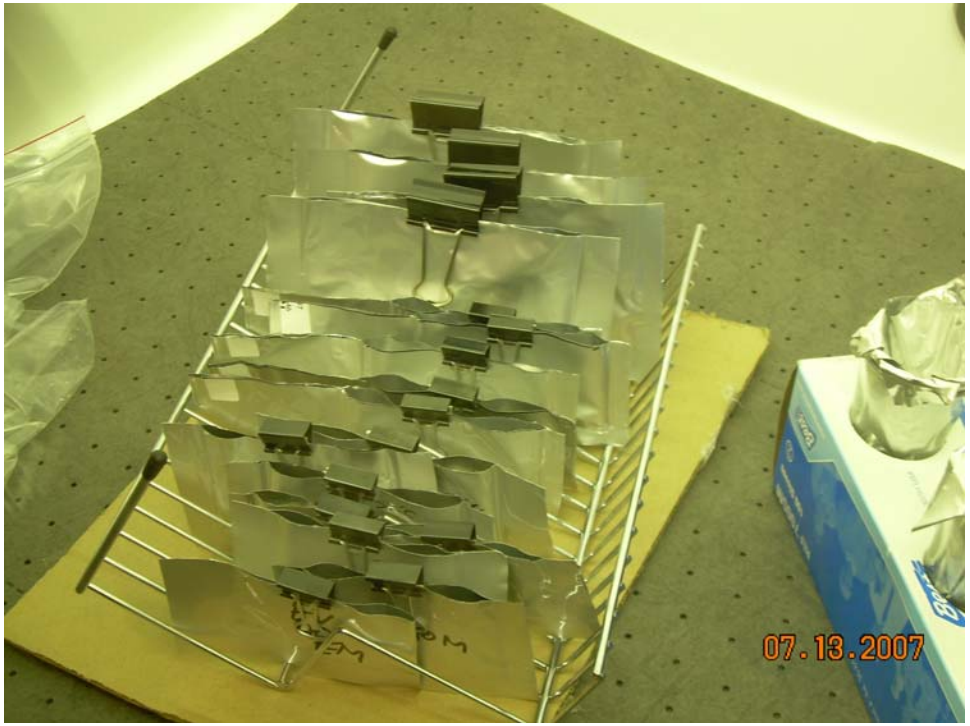

Recent Work (cont.)

- Hermeticity Comparison of Pouch Cell Designs
  - Electrovaya, Kokam, LG, Saehan, SKC, and Quallion
  - Pre-acceptance tests (OCV, mass, visual, DC IR and capacity)
  - Thermal cycling while in sealed gas containers (half of all cells)
  - Mine Safety Appliances (Teledyne Energy) Testing
    - Room temperature storage in sealed gas containers (1/2 of all cells)
    - Photo-acoustic infrared leak detection
  - Post-acceptance tests (same as pre)
  - DPA of these cells

Conclusions To Date

- Electrovaya spacesuit battery determined to be not flight worthy due to pouch corrosion susceptibility
- Corrosion spots in pouch were successfully replicated by shorting pouch to negative potential in certain pouch cell designs. Majority of black spots formed when resistance drops below 10,000 ohms.
- Failed to replicate hypothesized Li-Al alloy “corrosion” in pouch material even after 30 days of testing
- Fundamental boat corrosion studies using only cell components do not produce the accelerated corrosion that we saw in a complete cell
- LG and SKC cells which do not exhibit corrosion are designed with multiple layers of separator wrapped around the exterior of the cell pack
- LG and SKC both appear to use a thicker denser tab seal